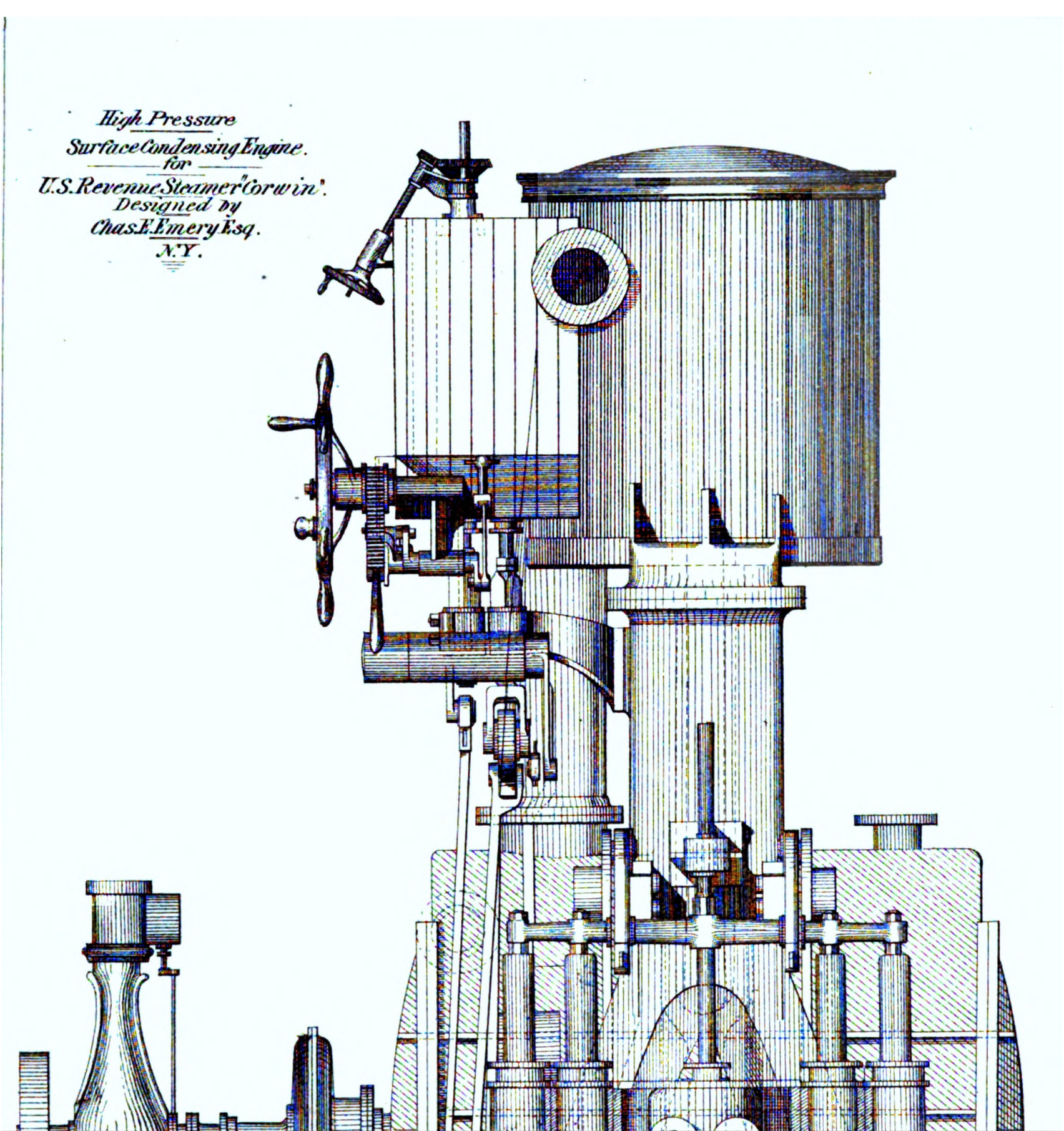

Modern American marine engines, boilers and screw propellers

Emory Edwards

Digitized by Google

ALSO, BY THE SAME AUTHOR:

A CATECHISM OF THE MARINE STEAM ENGINE, for the use of Engineers, Firemen and Mechanics. A Practical work for Practical Men. Illustrated by 63 Engravings. Third Edition; Thoroughly Revised, with much additional matter. 12mo. Price, $2.00 by Mail, Free of Postage.

Digitized by Google

MODERN

AMERICAN MARINE ENGINES, BOILERS

AND

SCREW PROPELLERS.

Digitized by Google

Plate V.

Twin Screw Engines
for U.S. Light House Steamers.
Designed by
Chas. W. Copeland, Esq.
New York.

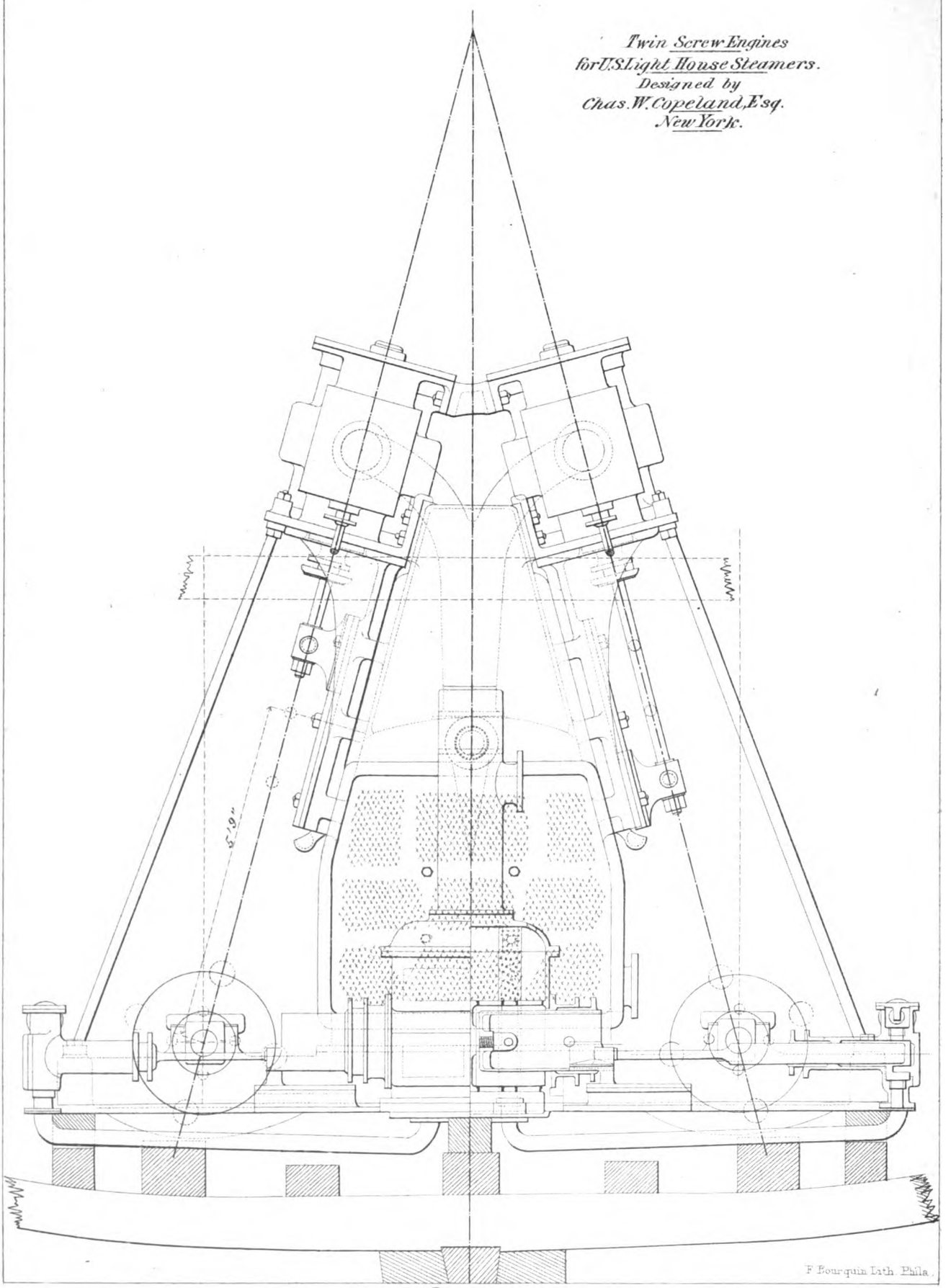

F. Bourquin Lith. Phila.

Frontispiece

Digitized by Google

MODERN AMERICAN

MARINE ENGINES, BOILERS

AND

SCREW PROPELLERS:

THEIR DESIGN AND CONSTRUCTION,

SHOWING THE PRESENT PRACTICE OF THE

Most Eminent Engineers and Marine Engine Builders in the United States,

AMONG OTHERS,

CHARLES W. COPELAND, CHARLES E. EMERY, ROBERT H. THURSTON, THOMAS MAIN, THOMAS JACKSON, GEORGE H. REYNOLDS, WILLIAM H. HOFFMAN, H. L. STELLWAGEN, JOHN ROACH & SON, THE WM. CRAMP & SONS SHIP AND ENGINE BUILDING CO., THE HARLAN & HOLLINGSWORTH CO., THE PUSEY & JONES CO., H. A. RAMSAY & CO., THE ATLANTIC IRON WORKS, THE MORGAN IRON WORKS, THE HERRESHOFF MANUFACTURING CO., F. C. & A. E. ROWLAND, DELAMATER IRON WORKS, THE NEW YORK SAFETY STEAM POWER CO., THE UNITED STATES BUREAU OF STEAM ENGINEERING, ETC.

FOR THE USE OF

ENGINEERS, DRAUGHTSMEN, AND ENGINEERING STUDENTS,

BY

EMORY EDWARDS, M. E.,

Author of "A Catechism of the Marine Steam Engine."

ILLUSTRATED BY THIRTY LARGE AND ELABORATE PLATES OF THE MOST RECENT AMERICAN MARINE ENGINES, BOILERS AND SCREW PROPELLERS.

PHILADELPHIA:
HENRY CAREY BAIRD & CO.,
INDUSTRIAL PUBLISHERS, BOOKSELLERS AND IMPORTERS,
810 WALNUT STREET.
1881.

Digitized by Google

COPYRIGHT BY
HENRY CAREY BAIRD & CO.,
1881.

STEREOTYPED AND PRINTED
BY INQUIRER P. & P. CO.,
LANCASTER, PA.

Digitized by Google

DEDICATED

TO

MY SON,

STERLING WALLACE EDWARDS.

Digitized by Google

Digitized by Google

PREFACE.

THIS work is presented to the Marine Engineers of the United States by one of their number, who hopes and believes it will be found a valuable and most useful companion in their daily labors. These examples of Modern American Marine Engines and Boilers are the work of the master-minds of the profession (contributed by themselves especially for this work), and are given to the student for his careful study and consideration, just as the works of the "old masters" are placed before the young *art* student, to be copied if necessary, or improved upon if his genius will permit it.

The object and aim of this work is to enable the student to place himself abreast of the best and most successful practice of the present day in the *design* and *construction* of the latest and most improved marine engines and boilers; or, in other words, the purpose is to impart, with all necessary fullness, that special information as regards new methods of design and construction, which every engineer desires to obtain, but which at present is almost inaccessible.

To those who have already some knowledge of steam and the steam engine, it will present a fund of *practical* information not to be obtained elsewhere except in the drawing offices of the shops or the "blue books" of the United States Government, which are not accessible to the general public; and it will be found all the more serviceable and specific from the exclusion of elementary and scientific matter, which though appropriate in an elementary treatise, would be out of place in this. It is a work of general principles and practice, in which both are carried out to their fullest development.

To those who wish to go deeper into the *theory* of the steam engine, or to study its *history* from the earliest times down to the present day, he would recommend "The Growth of the Steam Engine," by Prof. R. H. Thurston, of the Stevens Institute, and published in Appleton's International Scientific Series; and "A Text Book on the Steam Engine," by Mr. T. M. Goodeve. For a more detailed instruc-

Digitized by Google

tion on the *designing* of engines and boilers, he recommends "Drawing and Rough Sketching for Marine Engineers," by Mr. J. Donaldson, compiler of the Engineers' Annual, all of which can be had of the publishers of this work.

In conclusion, the writer begs to acknowledge his great indebtedness to the eminent engineers named on the title-page for their contributions and assistance in getting up this work. Also to "The Engineer," "Engineering," "The American Machinist," and to Mr. Donaldson, all high authorities on all things pertaining to steam and the steam engine.

EMORY EDWARDS, M. E.

512 Washington St., Wilmington, Del., September 1st, 1881.

Digitized by Google

CONTENTS.

CHAPTER I.

PAGE.

THE PHILOSOPHY OF THE STEAM ENGINE; ITS APPLICATION, AND ITS TEACHINGS RESPECTING ITS CONSTRUCTION AND ITS STILL FURTHER IMPROVEMENT.

What the Steam Engine is—Carboniferous Age—Affinity of Oxygen for Carbon, ... 9

What the Philosophy of the Steam Engine Traces—The Heat Energy Developed in the Furnace of the Steam Boiler—Internal Condensation and Re-evaporation—How Unutilized Heat rejected from the Steam Cylinder is carried away from the Engine—Principles Comprehended in its Philosophy—Facts bearing upon its Operation, and Directions in which Improvements must take place, ... 10

Available Heat produced in the Furnace of the Boiler, ... 11

Amount of Coal Utilized—Efficiency of a Good Steam Boiler, ... 12

The Conditions which Control Intelligent Design—Efficient Working of Steam and Consumption of Fuel, ... 13

Direction in which Improvement is now Progressing—The most Important Problem—Scientific Principles Involved—How shall a Machine be Constructed that shall most efficiently embody and accord with those Scientific Principles and the Principles of Engineering Practice, . 14

The Theory of the Steam Engine—What Science Indicates as to Success—Large Loss of Effect unavoidable—Results of the Increase in the Steam Pressure and Expansion since Watt's time, 15

The Tendency of Future Practice—In Detail—In the Boiler—In Construction—Wide Field for Improvement in Management—Folly to assume we have Approached a Limit of Efficiency, . 16

CHAPTER II.

THE HISTORY OF THE COMPOUND ENGINE.

Hornblower's Compound Engine (1781), ... 17

Woolf's Compound Engine (1804)—Sims' Compound Engine (1841), ... 18

Compound Engines of James P. Allaire, N. Y. (1825)—Compound Engines of Erastus W. Smith, N. Y.—Compound Engine of W. McNaught (1845)—The Compound Engine brought to Perfection by John Elder, Glasgow, ... 19

CHAPTER III.

THE THEORY OF THE COMPOUND ENGINE PRACTICALLY AND THOROUGHLY EXPLAINED.

Difficulties to Men without Mathematical Training, ... 20

What the Compound Engine is, ... 21

Digitized by Google

PAGE.

How it Operates—To Calculate the Average Pressure between Two Pistons—Compound Paddle Wheel Engines, ... 22

Cowper's System of Artificially Warming the Reservoir with Fresh Steam—The Pressure in the Reservoir—Carnot's Law of the Efficiency of Engines, ... 23

The High and the Low Pressure Cylinders—To find the Total Range of Expansion—Calculations required to Determine the Capacity of the Cylinders of a Compound Engine of 500 Horse Power, 24

Loss of Pressure between the Low and the High Pressure Cylinders, ... 26

CHAPTER IV.

COMPOUND AND NON-COMPOUND ENGINES, STEAM-JACKETS, ETC.

Results of Experiments made with the Machinery of the United States Coast Survey Steamer "Bache," and the Machinery of the United States Revenue Steamers "Rush," "Dexter," and "Dallas"—The "Bache" with Compound Engine—The "Rush" with Compound Engine. 28

The Single Engine of the "Dexter"—Information which may be gathered from these Experiments—The Steam-jackets of the "Bache" and the "Rush," 29

The Advantages of the Steam-jackets—Saving by the Use of Compound Engines, . . . 30

Value of Small Cylinder Jacket, ... 32

Economy of Steam as Influenced by the Size of the Cylinder, ... 34

Economy of Steam as Influenced by the Steam Pressures Employed, ... 36

Table of Results of Experiments, ... 39

The most Economical Point of Cut-off for the Pressure Employed, ... 40

Rule for the Calculation of the Proper Rates of Expansion for Different Steam Pressures, . . 41

CHAPTER V.

HOW TO DESIGN A MARINE ENGINE.

A Rough Sketch on a Small Scale, ... 43

Proportions, ... 45

CHAPTER VI.

HOW TO DESIGN A MARINE BOILER.

The Difficulties and Necessities Involved—The most Important Parts, ... 47

Drawing a Boiler—Arranging the Position of the Tubes and Furnaces, ... 48

Other Parts of the Boiler—Remarks on this Type of Boiler, ... 49

Rules for Proportions of Marine Boilers, ... 51

CHAPTER VII.

HOW TO DESIGN A SCREW PROPELLER.

The Conditions which Decide the Pitch—Getting up a Working Drawing—Proportions, . . 53

Terms Relating to Screw Propellers Explained, ... 55

Digitized by Google

CHAPTER VIII.

ENGINES AND BOILERS OF THE UNITED STATES STEAMERS "ARBUTUS," "LAUREL," "PANSY," AND "FISH HAWK," DESIGNED BY CHARLES W. COPELAND.

PAGE.

Dimensions of the Vessels—Specifications for Engines and Machinery—General Description, . 56
Cylinders—Framing, ... 57
Steam Chests—Pass-over Valve—Relief Valve—Slide Valves—Cut-off Valves, ... 58
Cylinder-heads—Bed-plate or Frame—Surfacer-condenser, ... 59
Exhaust Connections—Steam-pipe Connections—Air-pumps—Hot-well, ... 60
Outboard Delivery-pipe—Circulating-pump—Pistons—Piston-Rods—Feed-pump, . . . 61
Bilge-pump—Cross-heads—Slide Valve-stems—Eccentric and Rods—Connecting-rod, . . 62
Main Pillow-blocks—Crank-shaft—Line-shafts—Thrust Pillow-blocks, ... 63
Line-shaft—Pillow-blocks—Counter Balance Wheel—Screw-propellers—Shaft-brackets, . . 64
Lining of Deadwood—Stern-bearing—Inboard Stuffing-boxes—Steam Pipes and Fittings, . 65
Sea-valves—Outboard-delivery—Bilge-valve and Pipe—Hoisting Engine—Boiler, . . . 66
Fastenings and Supports of Boilers—Ash Pans, ... 67
Grate Bars—Felting—Boiler Attachments—Smoke-Chimney and Casing, ... 68
Steam-pump—Ash-shute—Deck Scuttles—Ventilators—Cast-iron Flooring, etc., . . . 69
Pipes and Boxes—Steam Heaters and Radiators—Water-tanks—Oil, Waste, Tallow-tanks—Steam Whistle, ... 70
Gong, Bell, and Speaking-tube—Salinometer—Gauges—Hoisting Ashes—Oil-cups and Water-pipes—Painting—Duplicate Pieces, ... 71
Tools, ... 72

CHAPTER IX.

HIGH-PRESSURE CONDENSING ENGINE OF THE UNITED STATES REVENUE STEAMER "CORWIN;" DESIGNED BY CHARLES E. EMERY.

General Description of the Engine, ... 73

CHAPTER X.

COMPOUND ENGINES AND BOILERS OF THE UNITED STATES IRON-CLAD "MIANTONOMOH;" DESIGNED AND CONSTRUCTED BY THE MORGAN IRON WORKS, N. Y.

Dimensions of the Vessel—General Description of Engines—Details, ... 74
Dimension of the Principal Parts of the Engines, ... 76
General Description of Boilers, ... 79
Dimensions of Boilers, ... 80

CHAPTER XI.

COMPOUND ENGINES AND BOILERS OF THE PACIFIC MAIL STEAMSHIP COMPANY'S STEAMERS "CITY OF PEKING" AND "CITY OF TOKIO;" DESIGNED BY THOMAS MAIN, CONSTRUCTED BY JOHN ROACH & SON.

General Description of the Engines, ... 84
Description of the Boilers—Results on the Trial Trips, ... 87
Indicator Diagrams of the "City of Tokio," 89

Digitized by Google

CHAPTER XII.

ENGINES OF THE PACIFIC MAIL STEAMSHIPS "CITY OF SAN FRANCISCO," "CITY OF NEW YORK," AND "CITY OF SYDNEY;" DESIGNED BY THOMAS MAIN, CONSTRUCTED BY JOHN ROACH & SON.

PAGE.

General Description of the Engines, ... 90
Performances of these Vessels, ... 94
Indicator Diagrams of the "City of San Francisco," 95

CHAPTER XIII.

ENGINES OF THE STEAMSHIP "DECATUR H. MILLER," BUILT BY THE HARLAN & HOLLINGSWORTH COMPANY, WILMINGTON, DEL.

General Description of the Engines, ... 96
The Propeller—The Boilers, ... 97

CHAPTER XIV.

ENGINES OF THE MORGAN STEAMSHIPS, "LONE STAR," "NEW YORK," "ALGIERS," AND "MORGAN CITY;" BUILT BY THE HARLAN & HOLLINGSWORTH COMPANY, WILMINGTON, DEL.

General Description of the Engines—The Propeller—The Boilers, ... 98

CHAPTER XV.

COMPOUND ENGINES AND BOILERS OF THE WM. CRAMP & SONS SHIP AND ENGINE BUILDING COMPANY, PHILADELPHIA.

General Description of the Engines, ... 100

CHAPTER XVI.

ENGINES OF THE AMERICAN STEAMSHIP LINE.

General Description of the Engines, ... 101
Performances of the Steamship Ohio, ... 102

CHAPTER XVII.

COMPOUND ENGINE OF UNITED STATES LIGHTHOUSE STEAMER "MANZANITA;" DESIGNED AND CONSTRUCTED BY H. A. RAMSAY & COMPANY, BALTIMORE, MARYLAND.

General Description of the Engine, ... 104
Performances of the Engine, ... 105

CHAPTER XVIII.

COMPOUND ENGINES, BOILERS, AND SCREW PROPELLERS FOR UNITED STATES SLOOPS OF WAR; DESIGNED AND CONSTRUCTED BY THE BUREAU OF STEAM ENGINEERING, UNITED STATES NAVY DEPARTMENT.

General Description of the Engines, ... 106
The Propeller, ... 109
The Boilers, ... 110

Digitized by Google

CHAPTER XIX.

ENGINE OF THE STEAMSHIP HUDSON; BUILT BY PUSEY JONES & COMPANY, WILMINGTON, DEL.

PAGE.
General Description of the Engine, ... 111
The Working of the Engine, ... 112
Table of the Comparative Dimensions and Power of the Steamships "New Orleans," "Knickerbocker," and "Hudson," 113

CHAPTER XX.

ENGINES OF THE SIDE-WHEEL STEAMERS "HOLLY" AND "JESSAMINE;" BUILT BY MALSTER & REANEY, COLUMBIAN IRON WORKS, BALTIMORE, MD., FROM SPECIFICATIONS BY CHARLES W. COPELAND.

Dimensions of the Vessels—Specifications for the Machinery Complete—Engine, Boiler, etc.—General Description, ... 114
Cylinder, etc.—Steam Chest and Side Pipes—Bed Plate, ... 115
Condenser—Air-pump, etc.—Piston-rod, etc., ... 116
Cross-heads—Front-links—Connecting-rod—Crank-pin—Air-pump, Cross-head, etc.—Cranks—Working-beam, ... 117
Main Centre—Pillow-blocks—Water-wheels and Shafts, ... 118
Throttle-valve—Feed-pumps—Bilge-pumps, ... 119
Side-delivery Valves—Injection-valves—Sea-valves—Steam-pumps—Pipes, Boxes—Oil-cups and Drip-pans, ... 120
Valve-seats—Bell, Speaking-tube, and Whistle—Gauges, Indicator, etc.—Ladders, Fastenings, Eye-bolts—Distilling Apparatus—Felting and Staving, ... 121
Boiler, ... 122
Ash-pans—Fastenings and Supports of Boiler—Grate Bars—Felting—Boiler Attachments, . 123
Smoke Chimney, Deck Scuttles—Cast-iron Flooring—Ventilators—Gallows Frame, . . 124
Steam-heaters, etc.—Water-tanks—Oil and Tallow-tanks—Waste-tank—Painting—Patent Rights, 125

CHAPTER XXI.

ENGINE OF THE STEAM YACHT "IDEAL;" DESIGNED BY GEORGE H. REYNOLDS, CONSTRUCTED BY THE DELAMATER IRON WORKS, NEW YORK.

Dimensions of the "Ideal—General Description of the Engine, ... 127

CHAPTER XXII.

HOFFMAN'S IMPROVED MARINE ENGINE.

General Description of the Engine, ... 128

CHAPTER XXIII.

THE HERRESHOFF MARINE ENGINE AND BOILER.

General Description of the Patent Safety Coil Boiler, ... 130
General Description of the Engine. 131

Digitized by Google

CHAPTER XXIV.

YACHT ENGINE BY F. C. & A. E. ROWLAND, NEW HAVEN, CONN.

CHAPTER XXV.

YACHT ENGINE BY THE NEW YORK STEAM SAFETY POWER COMPANY. PAGE.

General Description of the Engine, ... 133

CHAPTER XXVI.

BOILERS FOR MARINE USE, BY H. L. STELLWAGEN, M. E.

Important Considerations in the Construction of Marine Boilers, ... 135

Proportions of Heating and Grate Surfaces in Modern Marine Boilers—On what the Evaporating Power Depends, ... 136

Some Defects in Modern Boilers—Description of the Stellwagen Boilers, with Dimensions, . 137

Some Defects in the Manner of Making Contracts for Boilers—In Requiring Estimates, Dimensions and Specifications should be given, ... 139

INDEX. 141

Digitized by Google

LIST OF PLATES.

PLATE		PAGE
I.	Design for a Pair of Compound Marine Engines,	43
II.	Design for a Pair of Compound Marine Engines,	44
III.	Design for a Circular Marine Boiler,	47
IV.	Design for a Screw Propeller,	53
V.	Twin Screw Engines for United States Lighthouse Steamers; Designed by Charles W. Copeland, Esq., N. Y. (Frontispiece)	56
VI.	High Pressure Surface Condensing Engine for United States Revenue Steamer "Corwin;" Designed by Charles E. Emery, Esq., N. Y.,	73
VII.	Twin Screw Compound Engines for the United States Iron Clad "Miantonomoh,"	74
VIII.	Boiler of United States Iron Clad "Miantonomoh,"	79
IX.	Screw Propeller for United States Iron Clad "Miantonomoh,"	79
X.	Compound Engines of the Pacific Mail Steamers "City of Peking," and "City of Tokio,"	84
XI.	Compound Engines of the Pacific Mail Steamers "City of Peking," and "City of Tokio,"	86
XII.	Compound Engines of the Pacific Mail Steamers "City of San Francisco," "City of Sydney," and "City of New York,"	90
XIII.	Compound Engines of the Pacific Mail Steamers "City of San Francisco," "City of Sydney," "City of New York,"	91
XIV.	Compound Engines of the Steamship "Decatur H. Miller,"	96
XV.	Boiler of the Steamer "Decatur H. Miller,"	97
XVI.	High Pressure Surface Condensing Engines of the Morgan Line Steamers, "Lone Star," "Algiers," "New York," and "Morgan City,"	98
XVII.	Boilers of the Morgan Line Steamers "Lone Star," "Algiers," "New York," and "Morgan City,"	99

Digitized by Google

XVIII. Compound Marine Engines Designed and Constructed by The Wm. Cramp & Sons' Ship and Engine Building Company, . . 100
XIX. Marine Boilers Designed and Constructed by The Wm. Cramp & Sons' Ship and Engine Building Company, ... 100
XX. Engines of the Steamships "Pennsylvania," "Ohio," "Indiana," and "Illinois," of the American Steamship Company, Philadelphia, . 101
XXI. Compound Engine of the United States Lighthouse Steamer "Manzanita," 104
XXII. Compound Engine (back-acting) for United States Naval Steamers, Designed and Constructed by the Bureau of Steam Engineering, United States Navy Department, ... 106
XXIII. Compound Engine (back-acting) for United States Naval Steamers, Designed and Constructed by the Bureau of Steam Engineering, United States Navy Department, ... 107
XXIV. Marine Boilers for United States Naval Steamers, Designed and Constructed by the Bureau of Steam Engineering, United States Navy Department, ... 110
XXV. Screw Propeller for United States Naval Steamers, Designed and Constructed by the Bureau of Steam Engineering, United States Navy Department, ... 109
XXVI. Engine of the Steamship "Hudson," 111
XXVII. Engine of the Steam Yacht "Ideal," 127
XXVIII. Hoffman's Improved Marine Engine, ... 128
XXIX. The Stellwagen Boiler, ... 137
XXX. The Stellwagen Boiler, ... 138

Digitized by Google

MODERN
AMERICAN MARINE ENGINES.

CHAPTER I.

THE PHILOSOPHY OF THE STEAM ENGINE—ITS APPLICATION, AND ITS TEACHINGS RESPECTING ITS CONSTRUCTION, AND ITS STILL FURTHER IMPROVEMENT. *

"Practice varies,
But principles are eternal."

THE steam engine is a machine which is especially designed to transform energy, originally dormant and potential, into active and useful, available kinetic energy. When millions of years ago, in that early period called by the geologists the carboniferous, the kinetic energy of the sun's rays, and of the still glowing interior of the earth, was expended in the decomposition of the vast volumes of carbonic acid with which the air was then charged, and in the production of a life-sustaining atmosphere, and of the immense forests which then covered the earth with their almost inconceivably luxuriant vegetation, there was stored up for the benefit of the human race (then uncreated), an inconceivably great treasure of potential energy which we are now just beginning to utilize. This potential energy becomes kinetic and available wherever and whenever the powerful chemical affinity of oxygen for carbon is permitted to come into play, and the fossil fuel stored in our coal beds or in the wood of our forests is, by the familiar process of combustion, permitted to return to the state of combination with oxygen in which it existed in those early ages.

* Contributed by Prof. R. H. Thurston, of the Stevens Institute of Technology, from "A History of the Growth of the Steam Engine"—New York: D. Appleton & Co., 1878—and here reprinted by permission of the publishers.

Digitized by Google

The philosophy of the steam engine therefore traces the changes which occur from this first step, by which, in the furnace of the steam boiler, this potential energy which exists in the tendency of carbon and oxygen to combine to form carbonic acid is taken advantage of and the utilizable kinetic energy of heat is produced in equivalent amount, to the final application of resulting mechanical energy to machinery of transmission, through which it is usefully applied wherever mechanical power is required. The heat energy developed in the furnace of the steam boiler is partly transmitted through the metallic walls which inclose the steam and water in the boiler, there to evaporate water, and to assume that form of energy which exists in steam confined under pressure; and is partly carried away into the atmosphere with the products of combustion, serving a useful purpose by producing the necessary draught to keep up the combustion. The steam, with its store of heat energy, passes through pipes and passages to the steam cylinder of the engine, losing more or less heat on the way, and there expands, driving the piston before it, and losing heat by the transformation of that form of energy while doing mechanical work of equivalent amount.

But this steam cylinder is made of metal, a material which is one of the best conductors of heat, and therefore, one of the very worst possible substances with which to inclose anything as subtile and difficult of control as the heat pervading a condensible vapor like steam.

The process of internal condensation and re-evaporation, which is the great enemy of economical working, thus has full play, and is only partly checked by the heat from the steam-jacket, which, penetrating the cylinder, assists by keeping up the temperature of the internal surface and checking the first step, condensation, which is an essential preliminary to the final waste by re-evaporation. The piston, too, is of metal, and affords a most excellent way of exit for the heat escaping to the exhaust side.

Finally, all unutilized heat rejected from the steam-cylinder is carried away from the engine, either by the water of condensation, or, in the non-condensing engine, by the atmosphere into which it is discharged.

Having traced the method of operation of the steam-engine, it is easy to discover what principles are comprehended in its philosophy, to learn what are known facts bearing upon its operation, and to determine what are the directions in which improvements must take place, what are the limits beyond which improvements

Digitized by Google

cannot possibly be carried, and, in some directions, to determine what is the proper course to pursue in effecting improvements. The general direction of change in the past, as well as the present, is easily seen, and it may usually be assumed that there will be no immediate change of direction in a course which is well defined. We may, therefore, form an idea of the probable direction in which to look for improvements in the future.

Reviewing the operations which go on in this machine during the process of transformation of energy which has been outlined, and studying it more in detail, we may deduce the principles which govern its design and construction, guide us in its management, and determine its efficiency.

In the furnace of the boiler, the quantity of heat developed in an available form is proportional to the amount of fuel burned. It is available in proportion to the temperature attained by the products of combustion; were this temperature no higher than that of the boiler, the heat would all pass off unutilized. But the temperature produced by a given quantity of heat, measured in heat units, is greater as the volume of gas heated is less. It follows that at this point, therefore, the fuel should be perfectly consumed with the least possible air-supply, and the least possible abstraction of heat before combustion is complete. High temperature of furnace also favors complete combustion. We hence conclude that in the steam-boiler furnace, fuel should be burned completely in a chamber having *non-conducting* walls, and with the smallest air-supply compatible with thorough combustion; and, further, that the air should be *free from moisture*, that greatest of all absorbents of heat, and that the products of combustion should be *removed from the furnace* before beginning to drain their heat into the boiler. A *fire-brick furnace*, a large combustion chamber with thorough intermixture of gases within it, good fuel, and a restricted and carefully-distributed supply of air, seem to be the conditions which meet the requisites best. The heat generated by combustion traverses the walls which separate the gases of the furnace from the steam and water confined within the boiler, and is then taken up by those fluids, raising their temperature from that of the entering "feed water" to that due the steam pressure, and expanding the liquid into steam occupying a greatly increased volume, thus doing a certain amount of work, besides increasing temperature. The extent to which heat may thus be usefully withdrawn from the furnace-gases depends upon the conductivity of the metallic wall, the rate at which water will take heat from metal, and the difference

Digitized by Google

of temperature on the two sides of the metal. Extended "heating surface," a metal of high conducting power, and a maximum difference of temperature on two sides of the separating wall of metal, are the essential conditions of economy here. The heating surface is sometimes made of so great an area that the temperature of the escaping gases is too low to give good chimney draught, and a "mechanical draught" is resorted to, "revolving fan-blowers" being ordinarily used for its production; it is the most economical to adopt this method. The steam-boiler is generally constructed of iron, although "steel," when not hard enough to harden or temper, is better in consequence of its greater strength and homogeneousness of structure, and its better conductivity. The maximum conductivity of flow of heat for any given material is secured by so designing the boiler as to secure rapid, steady and complete circulation of the water within it. The maximum rapidity of transfer throughout the whole area of heating surface is secured, usually, by taking the feed-water into the boiler as nearly as possible at the point where the gases are discharged into the chimney-flue, withdrawing the steam power nearer the point of maximum temperature of flues, and securing opposite directions of flow for the gases on the one side and the water on the other; losses of heat from the boiler by conduction and radiation to surrounding bodies are checked as far as possible by non-conducting coverings. The mechanical equivalent of the heat generated in the boiler is easily calculated when the conditions of working are known. A pound of pure carbon has been found to be capable of liberating by its perfect combustion, resulting in the formation of carbonic acid, 14,500 British thermal units, equivalent to $14{,}500 \times 772 = 11{,}194{,}000$ foot pounds of work, and, if burned in one hour, to $\frac{11194000}{1980000} = 5.6$ horse-power; in other words, with perfect utilization, but $\frac{1}{5.6} = 0.177$, or about one-sixth of a pound of carbon would be needed per hour for each horse-power of work done; but even good coal is not nearly all carbon, and has but about nine-tenths this heat-producing power, and it is usually rated as yielding about 10,000,000 foot pounds of work per pound. The evaporative power of pure carbon being rated at 15 pounds of water, that of good coal may be stated 13½.

Of the coal burned in a steam boiler, it rarely happens that more than three-fourths is utilized in making steam; 7,500,000 foot-pounds is, therefore, as much energy as is usually sent to the engine per pound of good coal burned in the steam-boiler.

The "efficiency" of a good steam-boiler is therefore usually not far from 0.75 as

Digitized by Google

a maximum. Rankine estimates this quantity for ordinary boilers of good design and with chimney draught at $E = \frac{0.92}{1+0.5\frac{r}{s}}$; in which $\frac{r}{s}$ is the ratio of weight of fuel burned per square foot of grate to the ratio of heating to grate surface; this is a formula of fairly close approximation for general practice. The steam in the engine first drives the piston some distance before the steam valve is closed, and it then expands, doing work, and condensing in proportion to work done as the expansion proceeds, until it is finally released by the opening of the exhaust valve. Saturated steam is modified in its action by a process which has already been described, condensing at the beginning and re-evaporating at the end of the stroke, thus carrying into the condenser considerable quantities of heat which should have been utilized in the development of power.

Whether this operation takes place in one cylinder or in several, is only of importance in so far as it modifies the losses due to conduction and radiation of heat, to condensation and re-evaporation of steam, and the friction of the machine. Steam expands in the steam-cylinder quite differently under different circumstances. If no heat is either communicated to it or abstracted from it, however, it expands in an hyperbolic curve, losing its tension much more rapidly than when expanded without doing work, in consequence both of its change of volume and its condensation. The maximum value has been found to be given where the steam is saturated, but perfectly dry at the commencement of its expansion. The loss due to condensation on the cooled interior surface of the cylinder at the commencement of the stroke, and subsequent re-evaporation as expansion progresses, is least when the cylinder is kept hot by its steam-jacket, and when least time is given during the stroke for this transfer of heat between the metal and the vapor. It may be said that, all things considered, therefore, losses of heat in the steam-cylinder are least when the steam enters dry, or moderately superheated, where the interior surfaces are kept hottest by the steam-jacket or by the hot-air-jacket sometimes used, and where piston speed and velocity of rotation are highest. The best of compound engines, using steam of seventy-five pounds pressure and condensing, usually require about two pounds of coal per hour, per horse power.

We are now prepared to study the conditions which control the intelligent design, and to endeavor to learn what are the lessons taught us by science and by experience in regard to the essential requisites of efficient working of steam and economy

Digitized by Google

in the consumption of fuel. We may even venture to point out definitely the direction in which improvement is now progressing as indicated by a study of these requisites, and may be able to perceive the natural limits to such progress, and possibly to conjecture what must be the character of that change of type which only can take the engineer beyond the limit set to his advance so long as he is confined to the construction of the present type of engine.

First, we must consider the question, "What is the problem, stated precisely and in its most general form, that engineers have been here attempting to solve?"

After stating the problem, we will examine the record with a view to determine what direction the path of improvement has taken hitherto, to learn what are the conditions of efficiency which should govern the construction of the modern steam-engine, and, so far as we may judge the future by the past, by inference to ascertain what appears to be the proper course for the present and for the immediate future. Still further, we will inquire what are the conditions, physical and intellectual, which best aid our progress in perfecting the steam-engine.

This most important problem may be stated in its most general, yet definite, form as follows:

To construct a machine which shall, in the most perfect manner possible, convert the kinetic energy of heat into mechanical power, the heat being derived from the combustion of fuel, and steam being the receiver and conveyer of that heat.

The problem, as we have already seen, embodies two distinct and equally important inquiries:

The first: What are the scientific principles involved in the problem as stated?

The second: How shall a machine be constructed that shall most efficiently embody and accord with, not only those scientific principles, but also all of those principles of engineering practice that so vitally affect the economical value of every machine?

The one question is addressed to the man of science, the other to the engineer. They can be satisfactorily answered, even so far as our knowledge at present permits, after studying with care the scientific principles involved in the theory of the steam-engine under the best light that science can afford us, and by a careful study of the various steps of improvement that have taken place, and accompanying variations of structure, analyzing the effect of each change, and tracing the reasons for them.

Digitized by Google

The theory of the steam-engine is too important and too extensive a subject to be satisfactorily treated here in even the most concise possible manner. I can only attempt a plain statement of the course which seems to be pointed out by science as the proper one to pursue in the endeavor to increase the economical efficiency of the steam-engine.

The teachings of science indicate that success in economically deriving mechanical power from the energy of heat motion will, in all cases, be the greater as we work between more widely separated limits of temperature, and as we more perfectly provide against losses by dissipation of heat in directions in which it is unavailable for the production of power.

Scientific research has proved that, in all known varieties of heat-engine, a large loss of effect is unavoidable, from the fact that we cannot, in the ordinary steam-engine, reduce the lower limit of temperature in working below a point which is far above the absolute zero of temperature, far above that point at which bodies have no heat-motion. The point corresponding to the mean temperature of the surface of the earth is above the ordinary lower limit.

The increase in steam-pressure and in expansion since Watt's time has been accompanied by a very great improvement in workmanship, a consequence, very largely, of the rapid increase in perfection and in the wide range of adaptations of machine-tools, by higher skill and intelligence in designing engines and boilers; by increased piston-speed; greater care in obtaining dry steam, and in keeping it dry until thrown out of the cylinder, either by steam-jacketing or by super-heating, or both combined; it has further been accompanied by a greater attention to the important matter of providing carefully against losses by radiation and conduction of heat. We use, finally, the compound or double-cylinder engine for the purpose of saving some of the heat usually lost in internal condensation and re-evaporation, and precipitation of condensed vapor from great expansion. The direction which improvement seems now to be taking, and the proper direction, as indicated by an examination of the principles of science, as well as by our review of the steps already taken, would seem to be working between the widest attainable limits of temperature. Steam must enter the machine at the highest possible temperature, must be protected from waste, and must retain at the moment before exhaust the least possible amount of heat. He whose inventive genius, or mechanical skill, contributes to effect either the use of higher steam with safety and without waste, or the reduction of the temperature of discharge, confers a boon upon mankind.

Digitized by Google

In detail: In the engine, the tendency is, and may probably be expected to continue, in the near future at least, towards higher steam-pressure, greater expansion in more than one cylinder, steam-jacketing, superheating, a careful use of non-conducting protectors against waste, and the adoption of still higher piston speed.

In the boiler: More complete combustion without excess of air, and more thorough absorption of heat from the gases passing through the furnace. The latter will probably be ultimately effected by the use of a mechanically-produced draught, in place of the far more wasteful method of obtaining it by the expenditure of heat in the chimney.

In construction we may anticipate the use of better materials and more careful workmanship, especially in the boiler, and much improvement in forms and proportions of details.

In the *management* there is a wide field for improvement, which we may feel assured will rapidly take place, as it has now become well understood that *great care, skill, and intelligence are important essentials to the economical management of the steam-engine*, and that they repay liberally all of the expense in time and money that is requisite to secure them.

In attempting improvements in the direction indicated, it would be the height of folly to assume that we have reached a limit in any one of them, or even that we have approached a limit. If further progress seems checked by inadequate returns for efforts made, in any case, to advance beyond present practice, it becomes the duty of the engineer to detect the cause of such hinderance, and having found it, to remove it. A few years ago, the movement towards the expansive working of high steam was checked by experiments seeming to prove a positive disadvantage to follow advance beyond a certain point. A careful revision of results, however, showed that this was true only with engines built, as was then common, in utter disregard of all the principles involved in such a use of steam, and of the precautions necessary to be taken to insure the gain which science taught should follow. The hinderances are mechanical, and it is for the engineer to remove them.

Digitized by Google

CHAPTER II.

THE HISTORY OF THE COMPOUND ENGINE.

THE Compound Engine was invented by Hornblower in the year 1781, a year before the great Watt brought out his double-acting simple engine. Hornblower says in the specification of his patent:

"1. I use two vessels, in which steam is to act, and which in other engines are generally called cylinders.

"2. I employ the steam after it has acted in the first vessel to operate a second time in the other, by permitting it to expand itself, which I do by connecting the vessels together, and forming proper channels and apertures, whereby the steam should go in and out of said vessels.

"3. I condense the steam by causing it to pass in contact with metallic surfaces while the water is applied to the opposite side."

Here you see we have both the compound engine and the surface condenser away back in the year 1781.

Fig. 1 (taken from Goodeve's book on the steam engine—which by the way is a most excellent work) will give a good idea of Hornblower's compound engine. It was a single-acting engine, and had a separate condenser after the plan invented by Watt.

FIG. 1.

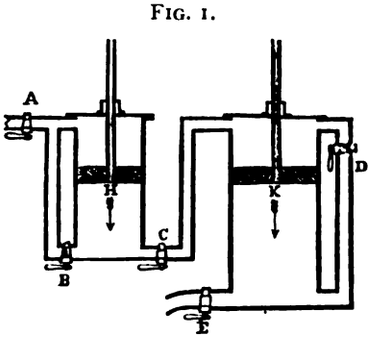

HORNBLOWER'S COMPOUND ENGINE, 1781.

The valves A, C and E are open, while B and D are closed, whereby steam from the boiler is entering the small cylinder H, and is also escaping from below the piston into the large cylinder K, while steam from K is passing into the condenser. The result is that both pistons descend together.

When they arrive at the end of their respective strokes, the valves A, C and E are closed, while the valves B and D are opened, and the pressure of steam is thus equalized on both sides of each piston, which is all that is required for performing the up stroke.

Digitized by Google

It will be noticed that the cylinders are of unequal lengths, the reason being that it was a *beam* engine, and the small or high-pressure cylinder stood nearer the centre of the beam.

Hornblower used steam at the atmospheric pressure only; and the economy of using steam at high pressures was first insisted upon by Woolf, who erected several compound engines which worked with steam at from 40 to 60 pounds above the atmosphere. This was in about the year 1814.

Fig. 2 will give a good general idea of Woolf's compound engine, working with steam at 40 pounds per square inch.

FIG 2.

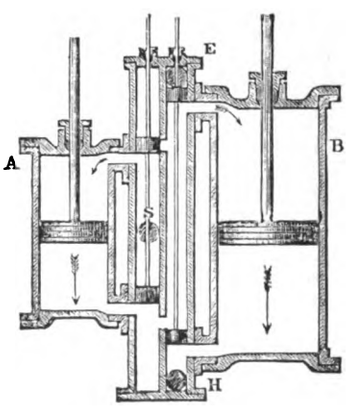

WOOLF'S COMPOUND ENGINE, 1804.

The working of such an engine will be understood from the figure, where the valves are small piston valves, moving in cylindrical passages. Steam is entering at S and passes at once to the upper end of the small cylinder A, while the steam below the piston in A is escaping by an open passage to the upper part of the large cylinder B. At the same time the steam below the piston in B is escaping into the pipe H, which leads to the condenser. Thus both pistons descend together. On depressing each valve rod the passages are reversed. Steam from S enters the lower part of A, while steam from the upper portion of A passes into the lower part of B. The upper part of B is in communication with E, which is also a passage leading to the condenser; hence the two pistons are similarly actuated by the joint pressure of the steam in each cylinder.

FIG. 3.

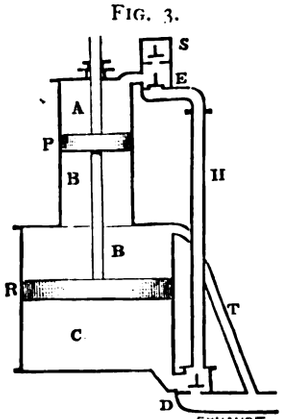

SIMS' COMPOUND ENGINE, 1841.

In 1841, a patent was taken out by Sims for a compound engine, the improvement consisting in constructing a steam cylinder divided into two parts of different areas, and with two pistons attached to one rod, whereof one fitted the upper and the other the lower cylinder. A constant vacuum was maintained in the space B B between the two pistons, by the open pipe T leading to the condenser, and a pipe H, provided with an equivalent valve E, formed a communication between A and C. The specification described the area of P as being one-fourth that of R, and steam from the boiler was admitted into A

Digitized by Google

through the valve S during a portion (say one-third) of the down stroke, and the space C was opened to the exhaust, whereby P descended as in any ordinary engine. On the return stroke, E was opened, when the pressures in the spaces A and C became equal; and since the area of P was much less than that of R, the pressure in C would preponderate, and P would be driven upwards.

In the year 1825, James P. Allaire, of New York, built compound engines for the steamer "Henry Eckford," and subsequently, constructed similar engines for several other steamers, one of which, the "Sun," made the trip from New York to Albany in 12 hours. Allaire used steam at 100 pounds pressure.

Erastus W. Smith, also of New York, shortly afterwards introduced compound marine engines on the Lakes. One of these steamers gave most satisfactory results, consuming less than two-thirds the fuel required by a sister vessel of the same line with the single cylinder engine. The steam cylinders of this engine were placed one within the other, the low pressure (exterior) cylinder being annular. They were 37 and 80 inches diameter, respectively, and 11 feet stroke. Both pistons were connected to one cross-head. The general arrangement was that of the common beam engine. The steam pressure was 75 pounds per square inch. This steamer was very fast and economical in fuel.

In 1845, W. McNaught patented a form of compound engine, in which a high pressure cylinder was incorporated in an ordinary condensing beam engine. This idea, whereby many old and wasteful condensing engines were converted into useful compound engines was then called *McNaughting* an engine, instead of calling it compounding an engine, as at the present time. McNaught described his improvement to consist in the application of a non-condensing engine to the ordinary low pressure condensing beam engine in general use, and attaching the high pressure cylinder to the working *beam* at the end *opposite* to that with which the low pressure cylinder was connected, whereby the steam after being used in the usual way in the non-condensing cylinder, passed into the condensing cylinder and was there used for driving its piston, after which it escaped into the condenser. This style of engine has just now (1880) been placed in one of our largest coasting steamers.

From the time of McNaught (1845) down to the present time, many new types of the compound engine have been brought out; but none were received with much favor for marine purposes until it was taken up by the late John Elder, of Glasgow whose genius and talent enabled him to bring it to its present state of perfection.

Digitized by Google

CHAPTER III.

THE THEORY OF THE COMPOUND ENGINE PRACTICALLY AND THOROUGHLY EXPLAINED.

We have reason to know that many men who have long passed the student period of their lives but dimly understand the principles of operation of the compound engine; while others who have to do with such engines every day, and all day long, know really nothing about the matter, save that "the steam is used twice over, first in one cylinder and then in another."

Those who have received an adequate mathematical training can easily be made to comprehend mathematical truths, even when these truths refer to branches of science with which they have had little or no previous acquaintance. But it is far otherwise with men whose training has been imperfect, either from accident or distaste for apparently dry reading. It so happens that no book exists in which the theory of the compound engine, or indeed of any engine, is stated in language which may be readily understood by any one who knows no more of mathematics than is represented by arithmetic; and a search for an explanation of the principles involved in the action of heat engines of any or all kinds usually results in disappointment, the would-be learner rising from the perusal of chapters on "expansion curves," "adiabatic lines," "thermal equivalents," and such like, without any clear idea of what the author whose pages he has consulted means; or more than the most vague notion of how his statements and propositions are to be employed in practice.

Thus it happens that when called upon, it may be, to design a compound engine, the luckless seeker after knowledge finds himself completely at fault. The best he can do is to fall back on the practice of others, and to become a slavish copyist. It now and then happens that otherwise skillful engineers have to design engines of a type to which they are totally unaccustomed. They fly to books of reference for aid, and they are immediately lost in a wilderness of knowledge, because they know not in what direction to seek for precisely what they require. It is quite possible to make enough of the theory of the compound engine so far clear to non-mathematical

Digitized by Google

readers that they may be able to calculate the dimensions of such an engine for any given power, and may be able to say why the dimensions they adopt for their cylinders are the best possible. But, on the other hand, they must be prepared to take certain statements as being true without proof, for the simple reason that none but those who have received some mathematical training could understand the proofs which they wish to see.

As this chapter is intended for those who have much to learn concerning the compound engine, it can be read with little benefit by those who have nothing to learn. It is strictly elementary, and those who feel disposed to be critical will do well to bear the fact in mind.

The compound engine is one in which the steam, having first acted on one piston, is, instead of being discharged into the air or a condenser, then permitted to act on another piston. In practice it is usual to make the cylinder which first receives steam from the boiler smaller than the second cylinder, but this is not absolutely necessary. It is done in practice to equalize the strains on the machinery; for let it be supposed that we have two cylinders, A and B, both of the same size, and that steam of 60 lb. pressure is permitted to act first on the piston in A, and after expansion on the piston in B. As a consequence of this expansion the steam acts on B with a pressure of, say, 15 lb. on the square inch. Then the second piston rod would be submitted to a less strain than that thrown on the first piston rod. As, however, the space between the two pistons is occupied by steam having a pressure of 15 lb. on the square inch, which pressure is driving B and resisting the motion of A, then the net strain on A is 60 lb.—15 lb.=45 lb., while the net strain, neglecting back pressure, on B is but 15 lb., or one-third as much. In order to get rid of this disparity, the first or high-pressure cylinder is almost invariably made smaller than the second or low-pressure cylinder, in such a ratio that the strains on both piston rods shall be as nearly as possible the same. For example, let us suppose that the pistons A and B had each 1,000 square inches of area, corresponding to a diameter of a little less than three feet. Then the strain on A would be $(60 - 15) \times 1{,}000 = 45{,}000$ lb., and the strain on B would be $15 \times 1{,}000 = 15{,}000$ lb. If, now, A was made, say, 21 in. diameter, then the strain on it would be $(60 - 15) \times 350 = 15{,}750$ lbs.; in this way the strains would, it will be seen, be very nearly equalized.

Another reason for making one cylinder smaller than the other is to reduce the total strain on the machinery which would otherwise be caused by admitting steam

Digitized by Google

of a very high pressure to act on a large piston. The small cylinder is in other words adopted, not only to equalize strains and make the crank shaft revolve at a nearly uniform speed, but as a measure of precaution to prevent the breaking down of the machinery.

When men who are unaccustomed to deal with compound engines are called upon to design them, they find themselves met at the outset by a difficulty which may be thus explained: A is at the beginning of its stroke, so is B. Steam having a pressure of say 30 lb. fills the space between the two pistons, as shown by shaded portion of diagram below, Fig. 4. As the pistons move in the direction of the arrows, the space between them is continually increasing in dimensions, and by the time the pistons have assumed the position illustrated in Fig. 5, the pressure as shown by the less densely shaded portion will have fallen to say 10 lb. It is obvious, therefore, that the small piston will have a continually diminishing force of retardation acting to oppose its ascent, while the piston B will have a continually diminishing force tending to cause its descent.

To calculate what the average pressure between the two pistons will be is *apparently* necessary in order to determine the power given out in each cylinder. This calculation is easily enough made when engines work with cranks opposite each other. In practice, however, such engines are seldom met with. The cranks are always placed at some angle to each other, varying between 90° and 120°; the former is the rule. This being the case, it will be seen that B is beginning its stroke just at the moment when A has made one-half its stroke, and *vice versa*. Thus it happens that B may not be ready to take the steam discharged from A at the moment when it reaches the end of its cylinder, and what is known as a reservoir or intermediate receiver is provided to hold it.

FIG. 4.

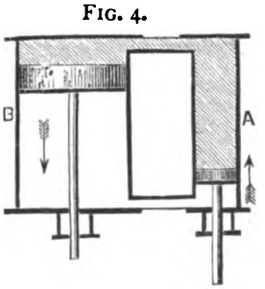

FIG. 5.

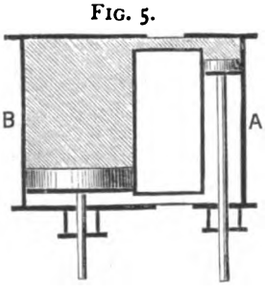

In compound paddle-wheel engines of the oscillating type, this receiver is usually placed between the cylinders and beneath the floor plates of the engine room. In the case of screw engines, it either takes the shape of a jacket round the small cylinder, bringing up its apparent diameter to that of the large cylinder, and so making the design symmetrical, or else a very large pipe is used to lead the exhaust steam

Digitized by Google

from the valve chest of one cylinder to that of its fellow. As it is evident that steam should not be allowed to cool in the reservoir, it is well clothed.

Mr. Cowper several years ago patented a system of artificially warming the reservoir with fresh steam from the boilers. The device was known as "Cowper's hot pot," but experiments showed that the gain did not compensate for the trouble and expense incurred. In the early days of the compound marine engine it was believed that the reservoir must be large, at least equal in capacity to the low-pressure cylinder. Experience has, however, proved this idea to be fallacious, and screw engines with right-angled cranks are now made with no other reservoir space than that supplied by the exhaust ports and valve chests.

The pressure in the reservoir or its equivalent fluctuates continually and rhythmically. It is possible to calculate its amount, but not easy; and it need hardly be said that such a calculation is a stumbling-block which the non-mathematical designer of compound engines falls over at once. It forms no part of our purpose to explain the method of calculating intermediate pressures—that is to say, the pressure of the steam filling the space between the pistons at any portion of the stroke.

This pressure may be entirely disregarded in calculating the dimensions of a compound engine to work up to any given power.

This may appear to be a strange proposition, seeing that the amount of pressure between the pistons determines how much power shall be developed in each cylinder. It is nevertheless true that it is with the pressure in the valve chest of the high-pressure cylinder, and with that in the condenser, that for practical purposes we have alone to do. This statement is a deduction from the proposition that the efficiency of a steam or other heat engine is entirely independent of the number of cylinders through which the fluid passes while doing work; that is to say, one pound of steam will do as much work in expanding through a given range in a single cylinder as it will do if expanded through the same range in two or any greater number of cylinders. The proof of this truth is easily given.

Many years ago, Carnot, an eminent mathematician, demonstrated that the efficiency—that is to say, the power of doing work—of any hot air, steam, or gas engine, depended solely on the difference between the temperature, T, at which it received the fluid, and the temperature, t, at which it rejected it. Now it is evident that the number of cylinders used will not affect the temperature at which steam enters the first cylinder, because that temperature is fixed by the pressure in the

Digitized by Google

cylinder at the moment the piston begins to make its stroke. Nor can it affect the temperature at which the steam is discharged, because that also is fixed by the pressure chosen for the moment the exhaust port opens. But the initial and terminal pressures may be entirely independent of the number of cylinders; because, for example, steam may be expanded ten times just as well in one cylinder as in two or more. From all of which it follows that in calculating the proportions to be given to the cylinders of a compound engine, we may disregard the pressure between the two pistons, and proceed as if all the power were to be developed in one cylinder only.

This cylinder will be the low-pressure cylinder, and when its dimensions are fixed, those of the other cylinder may be deduced from it by the following empirical rule based on the best modern practice: The high-pressure cylinder is to be made one-half the diameter of the low-pressure cylinder, and steam is to be cut off in the high-pressure cylinder when the piston has made five-eighths of its stroke, and is to be permitted to follow the low-pressure piston for about seven-eighths of its stroke.

If this rule be adopted, the work done in the two cylinders will be very equally divided. Should it be thought desirable to expand the steam a little more, and cut off, say at half stroke in the small cylinder, then this last may be made a little more than half the diameter of the low-pressure cylinder. Should it be thought better to expand a little less, then the high-pressure cylinder may be made a little smaller than half the diameter of its fellow. The rules here laid down are very seldom indeed departed from in practice, and the results obtained by observing these rules are uniformly so satisfactory that no reason exists for using any other.

When three cylinders are employed, then the united areas of the pistons of the low-pressure cylinders should be equal to four times that of the high-pressure cylinder.

To find the total range of expansion, divide the capacity of the low-pressure cylinder, plus ports and passages which are emptied into the condenser, by that of the space swept through by the high-pressure piston while taking steam from the boiler, plus the capacity of ports and passages emptied into the large cylinder. When two low-pressure cylinders are used, the rule is just the same, bearing in mind that each large cylinder is virtually filled twice by one small cylinder full of steam.

In order to make what we have said quite clear, we shall now give the calculations required to determine the capacity of the cylinders of a compound engine intended to indicate 500 horse power.

Digitized by Google

One horse power is equivalent to 33,000 lbs. raised a foot high in a minute.

Then, 33,000 × 500 = 16,500,000 foot-pounds per minute.

Screw engines of 500 horse power make from 60 to 70 revolutions per minute, corresponding with a 3 ft. stroke to 360 ft. to 420 ft. of piston per minute. We may take the latter velocity as consistent with good modern practice. Then, we have $\frac{16,500,000}{420} = 39,286$ lbs. in round numbers as the gross pressure which must act on a piston moving at 420 ft. per minute, in order that 500 indicated horse power may be developed. It is evident that this number, divided by the average pressure per square inch, will give as a quotient the number of square inches of area which the piston must have.

It will be seen that in all these calculations we proceed as though the engine were to have but one cylinder. We have now to find the average pressure in the cylinder throughout the stroke. This is an exceedingly simple matter, albeit it now and then sorely distresses students. We must first find how many times the steam is to be expanded, and its pressure when it first enters the cylinder. It may be assumed that a modern compound screw engine will work with a boiler pressure of 70 lbs. safety valve load. In all that follows, however, the safety valve load is to be entirely disregarded, and nothing must be dealt with but the absolute pressure of the steam —that is to say, the boiler pressure, plus 15 lb. for the air pressure; the gross boiler pressure, then, we suppose to be 70 + 15 = 85 lb. It will be safest to assume that 5 lb. of this pressure will be lost between the boiler and the cylinder. The initial cylinder pressure will then be 80 lb.

To find the ratio of expansion, let us assume that we shall use two cylinders, one having one-fourth the capacity of the other, and that in the first steam shall be cut off at each stroke. Then it is clear that the ratio of expansion will be eight to one —neglecting clearance, etc., for the moment—which is quite as much as is consistent with economical working.

In "Molesworth's Pocket-book" will be found a table of hyperbolic logarithms. Every engineering student is supposed to have a "Molesworth," so we name it, although tables of hyperbolic logarithms will be found in many other works.* The student who knows nothing of logarithms need not be frightened; they will give

* See Molesworth's Pocket-book of Useful Formulæ and Memoranda for Civil and Mechanical Engineers, page 262. Price, $1.00. Philadelphia, Henry Carey Baird & Co.

Digitized by Google

him no trouble in this case. Opposite 8 he will find 2.079; add 1 to this, and we have 3.079; multiply this by the initial pressure of the steam, or 80 lb., and we have 246.320. This is to be divided by the exponent of the ratio of expansion—that is, by 8—and the quotient, 30.79, will be the average pressure in pounds of 80 lb. steam expanded eight times. For any other ratio of expansion we proceed in the same way, using the hyperbolic logarithm of the ratio.

The movement of the low-pressure piston of a compound engine is resisted by the pressure of the uncondensed steam, a perfect vacuum never existing in a condenser. The back-pressure in different engines varies. It may be taken to be about 3 lbs. But to be on the safe side we assume it to be 3.79 lbs. Deducting this from the average pressure, 30.79 lbs., we have left 27 lbs. as the net effective pressure.

We have seen that the gross effective pressure on our piston must be 39,286 lbs. Dividing this by 27, we have 1,455 as the number of square inches of area which the piston must possess—that is to say, the piston must be a little more than 43 in. in diameter; the small cylinder is to be one-half this. So our compound engine, to indicate 500 horse power, will have two cylinders, one 43 in. and the other 21.5 in. in diameter, with a stroke of 3 ft.

We have now to consider another factor in our calculations, which is, that in all compound engines a loss of pressure occurs between the low-pressure and the high-pressure cylinder, due in part to the reservoir space between them, and in part to condensation caused by cooling. The result is what is known as "the gap" met with in the diagrams taken from all compound engines; that is to say, when the diagrams from the high and low-pressure cylinders are put together, a gap or interval of greater or less dimensions always exists between them. With the effect of the gap on the economy of compound engines we need not now concern ourselves. It is enough for our purpose to know that the pressure in the low-pressure cylinder is in practice never so high as it ought to be according to theory, and consequently some addition is always made to the dimensions of an engine to allow for this. The allowance varies. Ten per cent. will not be too much, and in order that we may be certain that our compound engine will really indicate 500 horse power with 80 lbs. of steam expanded eight-fold, and with 420 ft. of piston speed per minute, the cylinders, instead of being 43 in. and 21.5 in. in diameter, ought to be 45 in. and 22.5 in. in diameter.

Digitized by Google

Those who master what we have endeavored to explain will see that to calculate the principal dimensions of a compound engine of a given power is by no means difficult. By following the rules we have laid down, they may rest content that they will make no mistakes.

We have endeavored to set forth as much of the theory of the compound engine as will enable the student to understand the broad principles of its action, and the basis on which rules for proportioning its dimensions rest; and we trust that in doing this we have satisfied the wishes of the student.

Digitized by Google

CHAPTER IV.

COMPOUND AND NON-COMPOUND ENGINES, STEAM-JACKETS, ETC.*

HEREWITH is presented a discussion of the results of experiments made at Baltimore, Md., in May, 1874, with the steam machinery of the United States Coast Survey steamer "Bache," under the general direction of Charles E. Emery, and of the results of experiments made at the United States Navy Yard, Boston, Mass., in August, 1874, with the steam machinery of the United States Revenue steamers "Rush," "Dexter," and "Dallas," under the general direction of Chief Engineer Charles A. Loring, United States Navy, and Charles E. Emery.

Both series of trials were made with the vessels secured to the dock.

1. The Coast Survey steamer Bache was provided with a compound engine (15″x25″x24″) of the steepled type (that is, the smaller cylinder was arranged above the other, and the pistons had a common rod). The larger cylinder was steam-jacketed, and so arranged that it could be operated independently, using steam of the same pressure and with the same degree of expansion as when both cylinders were working together as a compound engine. Trials were made of the two systems of working, both with the steam-jacket in use and when the same was disconnected, and the amount of water collected from the jackets and intermediate chamber was separately weighed and noted. All the experiments, except one, were made with an approximate steam pressure of 80 pounds, and with different degrees of expansion for each system of working, with and without use of jacket. The indicated power was measured, also the cost of the same in steam (shown by the weight of feed-water used). The evaporative efficiency of the boiler was also determined.

2. One of the revenue steamers, the Rush, was provided with a compound engine (24″x38″x27″) constructed on the "fore and aft" system (that is, the cylinders were at the same level, and in this case the pistons were connected to cranks at right angles). Both cylinders were steam-jacketed. The other two revenue steamers, viz., the Dexter and Dallas, had non-compound engines, with unjacketed cylinders.

*Contributed by Charles E. Emery, Ph. D., New York.

Digitized by Google

The compound engine of the Rush was operated in two different runs at the approximate steam pressures of 70 and 40 pounds. The single engine (26″x36″) of the Dexter was operated with the same steam pressures and at different degrees of expansion for each pressure. The engine (36″x30″) of the Dallas was operated at an approximate steam pressure of 35 pounds, and at different degrees of expansion. The boilers were all substantially alike. The performance was obtained by measuring the indicated power and its cost in steam, as shown by the weight of feed-water used. The evaporative efficiency of the boilers was also ascertained during the longer experiments.

From the two series of experiments may be gathered the following information, viz.:

1. The saving by the use of a steam-jacket on the cylinder of a non-compound engine, and the larger cylinder of a compound engine.*

2. The relative saving that may be obtained by the use of a compound engine, as compared with a single engine, operated at the same or a different steam pressure, or at the same or a different degree of expansion.

3. The probable value of a steam-jacket on the smaller or high-pressure cylinder of a compound engine.

4. The influence which the size of a steam cylinder has upon the economy of fuel.

5. The relative cost of the power, at different steam pressures, in compound and non-compound engines.

* The steam-jacket on the larger cylinder of the steamer Bache, and that on each of the cylinders of the steamer Rush, were supplied with steam in the following manner: Steam was first admitted to the cavity in cylinder cover, from which, by means of a pipe leading from the bottom of the cavity, it was conducted to the side-jacket, thereby keeping the cavity in cover clear of water. The side and bottom jackets communicated, and the water of condensation was blown from latter into the hot well, the flow being regulated by the engineer to maintain a water level, in a glass gauge, on a small chamber in the drain-pipe.

On the Bache, when operated as a compound engine, the steam for the jacket was taken from bottom of steam-chest of upper cylinder, thereby keeping that drained. When the lower cylinder was operated as a single engine the steam for jacket was taken from main steam-pipe. On the Rush, the steam for jackets was taken directly from the boiler.

It will be shown, in discussing experiments other than those above mentioned, that the system of draining the steam-chests, as well as the steam-jackets, is of considerable advantage.

Digitized by Google

6. The most economical point of cut-off for the steam pressures employed.

These subjects are discussed in the order named, and paragraphs to which it may be desirable to refer are designated by letters affixed to the numbers referring to the subjects.

1. THE ADVANTAGES OF THE STEAM-JACKET—(1 A.) Comparing the minimum costs for each method of working, we find that the single cylinder of the Bache when operated without the steam-jacket required 26.247 pounds of feed-water per indicated horse-power per hour, and that with steam-jacket in use there was required but 23.154 pounds, showing that the saving by the use of the steam-jacket on a single cylinder engine worked at its most economical point of cut-off is 11.78 per cent. With more expansion, as shown by comparing the previous experiments, for each method of working the jacket produces a greater saving, but the steam is in all cases being cut off too short for maximum economy, as will be discussed hereafter.

(1 B.) When the engine of the Bache was operated as a compound engine, with steam-jacket not in use, experiment 2 shows a cost of 23.036 pounds of water per I. H. P. per hour, and experiment 6 with steam-jacket in operation, a cost of 20.332 pounds. The saving in steam by the use of the jacket on the larger cylinder of a compound engine is then shown to be 11.73 per cent.

2. SAVING BY USE OF COMPOUND ENGINE—(2 A.) The minimum cost of the power with the single cylinder of the Bache and steam-jacket in use, experiment 16, is 23.154 pounds, and with engine compounded, and steam-jacket on large cylinder in use, it is 20.332 pounds; so the compound engine was operated with a saving of 12.19 per cent. in this case, as compared with the single engine.

(2 B.) The above experiments were made at the same steam pressure, but with a less degree of expansion in the single engine, the steam being expanded nearly seven times (6.975) in the compound engine, and but little more than five (5.11) times in the single engine. With the steam expanded eight and one-half times (8.57) in the single engine, the cost is 24.088 pounds, using the same steam pressure, so the compound engine shows a saving compared therewith of 15.6 per cent. The difference increases as the expansion is increased in the single engine.

(2 C.) The minimum cost of the power with the single cylinder and steam-jacket not in use, is 26.247 pounds, and with engine compounded, without steam-jacket, it is 23.036 pounds; so without using steam-jackets in either case, the compound

Digitized by Google

engine operated with a saving of 12.23 per cent. as compared with the single engine.

(2 D.) With steam-jacket in use on larger cylinder of compound engine, and not in use on single engine, the costs, as before stated, were respectively 20.332 and 26.247 pounds, showing a saving by the use of the former under conditions stated of 22.54 per cent.

(2 E.) In the experiments with the revenue steamers it will be seen that the relative costs of the power in the compound engine of the Rush with both cylinders jacketed, and in the single engine of the Dexter with unjacketed cylinder, were as .7706 to 1.00, corresponding to a saving by the use of the compound engine with both cylinders jacketed, as compared with an engine with single unjacketed cylinder, of 22.94 per cent., or practically the same as shown on the Bache with only the larger cylinder of the compound engine jacketed.

(2 F.) Assuming that a steam-jacket on the single cylinder of the Dexter would have reduced the cost in the same proportion that it did in the Bache, viz., 11.78 per cent., the cost of the power in the single cylinder engine, which was 29.77 per cent. greater than in the compound engine, would have been reduced ($1.2977 \times 11.78 =$) 15.29 per cent., and the relative costs would have been as 1 to 1.1448, equivalent to a saving of ($1.1448 - 1.00 \times 100 \div 1.1448 =$) 12.65 per cent., by the use of the compound engine with jacketed cylinder, as compared with the single engine with jacketed cylinder.

As above stated (2 A), the experiment with the Bache showed a saving of 12.19 per cent. under similar conditions.

The experiments do not furnish conclusive information as to what the relative performances of compound and non-compound engines of larger sizes would be. It seems probable, however that in such case the compound engine would show still greater advantages.

In the revenue experiments above cited (2 E), the saving of 22.94 per cent. was reduced to 12.65 per cent. (2 F) by assuming that a steam-jacket on the cylinder of a single engine would save as much as it did on the Bache, which is not probable, for the reason that the cylinder of the Dexter was larger than that of the Bache, and it is an evident fact that the ratio of capacity to jacket surface decreases as the size of the cylinder is increased.

This reasoning would not apply to the experiments made on the Bache with the

Digitized by Google

same engine operated on both systems; but in that case the compound engine was not constructed for maximum economy, while the cylinder used for the single engine was probably as good as could be made. The latter was thoroughly steam-jacketed at sides and in bottom and cover. It also had large cylinder ports, and the minimum amount of space in clearances and passages. Tight pistons were used in all cases.

When the engine of the Bache was used as a compound engine, the upper cylinder, though well felted and lagged, was necessarily exposed to more refrigerating influence than in compound engines on the "fore and aft" system. The omission of the steam-jacket on the small cylinder may also have occasioned some slight loss, which subject is discussed hereafter. These disadvantages were considered in the first instance as of less consequence than the saving of space, etc., accomplished by adopting the system in that particular location; but in making a comparison of compound and non-compound engines, it is proper that they should be considered.

Both series of experiments appear to show, then, that the compound engines were at least not tried at any advantage as compared with the single engines; on the contrary, the indications are that still greater comparative economy would be shown by the compound system in larger engines.

3. VALUE OF SMALL CYLINDER JACKET.—These experiments appear also to corroborate the views held by the writer at the time the engine of the Bache was constructed (1870), viz., that the steam-jacket on the smaller or high pressure cylinder of a compound engine, working with the ordinary degree of expansion, was, contrary to the views of Rankine on the subject, of comparatively little value.

(3 A.) The experiments with the compound engine of the Rush, where both cylinders were jacketed, compared with the single engine of the Dexter, with unjacketed cylinder, showed a saving of 22.94 per cent.; and in experiments on the Bache, the compound engine with jacket on large cylinder showed a saving, compared with single cylinder used without jacket, of 22.54 per cent.; so the additional jacket on the small cylinder of the Rush did not sensibly affect the comparison on this basis.

(3 B.) On the Bache we find that the saving by the use of a compound engine with large cylinder jacketed, as compared with a single cylinder used with jacket, is 12.19 per cent.; and by indirectly comparing the performance of the Bache and the revenue steamers, the compound engine of the Rush with both cylinders jacketed, shows a saving of 12.65 per cent. The saving by the jacket, on the small cylinder, could not then be more than (12.65—12.19=) 0.46 per cent.

Digitized by Google

(3 B.) It is probable, however, that in compound engines constructed on the "fore and aft" system, the steam-jackets on *both* cylinders heat the intermediate steam as it passes from one cylinder to the other, and thereby reduce the cost of the power.

(3 C.) The opinion as to the relative value of the steam-jackets on the two cylinders of a compound engine was founded upon the views of the writer expressed in print as early as 1866–7, which were in substance, that the great difference between the theoretical and practical performances of the steam-engine could be satisfactorily accounted for by the differences of temperature to which the interior surfaces of the cylinder are practically subjected. The metal of the cylinder is cooled by the exhaust steam, and must be reheated during the next stroke, which causes condensation of part of the incoming steam; the resulting water is re-evaporated, partially during the expansive portion of the steam stroke, but mostly during the next exhaust stroke, thereby cooling the cylinder again, and the result is to transfer heat (by the alternate condensation and re-evaporation described) directly to waste in the atmosphere or condenser.

A full discussion of this branch of the subject would occupy too much space in this paper. It was considered that the range of temperature in the smaller cylinder of a compound engine is generally less than in the larger cylinder, and, moreover, that any heat transferred (so to speak) past the piston of the smaller engine would do useful work in the second cylinder. These views are apparently sustained by the experiments, but it should not be assumed that the jacket is of less value simply because high-pressure steam is used in the smaller cylinder, and that, therefore, a jacket is unnecessary for a high-pressure condensing engine. Quite the contrary is true, for in such case the interior surfaces of the cylinder are exposed to a variation of temperature equal to that in both the cylinders of a compound engine, and the jacket becomes of the greatest importance.

(3 D.) It is probable that the steam-jacket produces economy by drying and superheating the steam near the heated surfaces. If this be done promptly, the heat imparted to the steam assists in performing useful work during the expansive portion of the stroke. Even during the exhaust stroke the dry steam near the surfaces of the cylinder will absorb very little heat compared to that required to evaporate particles of water which are always present when no jacket is used. The dry steam can only absorb heat at a rate proportioned to its specific heat, which is less than

Digitized by Google

half that of water. The watery particles will take up both sensible and latent heat, or, for equal weights under actual pressures used, about two thousand times as many heat units as the dry steam. Could the steam in a cylinder be discharged simply saturated or slightly superheated, either by previous superheating or the use of efficient steam-jackets, the loss would be very small. At high expansions this is impracticable. Some water is always present, and in its evaporation cools the metal surfaces somewhat; and it is always better to re-supply the heat from the steam-jacket than by condensation of incoming steam, as in the latter case the resulting water of condensation remains in the cylinder and causes increased losses in the manner previously indicated.

From these considerations it may be inferred that steam-jacketed cylinders would be most efficient if of comparatively small diameter and long stroke, in order to obtain as much surface in proportion to volume as possible; and that for unjacketed cylinders the surface in relation to volume should be reduced as much as possible.

4. Economy of Steam as Influenced by the Size of the Cylinder.—It is a well known fact that large engines are more economical per unit of power furnished than small ones. It is related that Watt was led to his invention of a separate condenser by observing the excessive quantity of steam required to operate a small model engine, as compared with that found sufficient for engines of practical sizes—the vacuum being produced in both by admitting the condensing water directly into the steam cylinder. We have heretofore called attention to the fact that Watt, in producing condensation in a separate vessel, only partially overcame the difficulty; steam chilled by the performance of work being such an excellent radiator and absorbent of radiant heat as to cool the interior surfaces of a cylinder, upon reduction of pressure by condensation, even in a separate vessel, to a very material degree, if not to the same extent as if the water were directly admitted to the cylinder

The manner in which the loss takes place was discussed under the previous heading, and it is evident that the amount of heat transferred to waste in an unjacketed cylinder will, for a given range of temperature, vary as the amount of metal surface, and inversely as the volume of steam exposed to the same. As the size of the cylinder is increased the volume increases in a more rapid ratio than the enclosing surfaces, hence the loss, relative to the unit of volume and power, decreases as the size of the cylinder is increased.

Digitized by Google

(4 A.) The minimum cost of the power, using a single engine without a steam-jacket, was on the Bache, 26.247 pounds of feed-water per horse-power per hour, and on the Dexter it was 23.857. Again, on the Bache, using compound engine and jacket on the larger cylinder, the cost was 20.332 pounds, and on the Rush it was 18.384. The engine of the Bache was smaller than that of either of the other steamers, and, as shown, the cost was in both cases considerably more. We have already pointed out that the relative performances for different methods of working in one series correspond well with those shown by the other, such, for instance, as the saving of the use of the steam-jacket and the relative economy due to a compound engine; but we now find that the actual costs shown in one series cannot be directly compared with those obtained in the other.

It may be accepted as a general fact that an experiment made with one engine cannot be used directly as a basis of comparison except for engines of similar size operated under similar conditions. The want of general information on this subject has often caused great misapprehension. Engineers have again and again made improper comparisons, and often have conscientiously drawn directly opposite conclusions from the same data, when neither side had access to information sufficiently complete to refute the arguments of the other.

(4 B.) Referring to the experiments under discussion, we find that the minimum cost of the power with the jacketed cylinder of the Bache, non-compound, was 23.15 pounds of water per horse-power per hour, and that with the unjacketed cylinder of the Dexter it was but 23.86 pounds. Had there been but these two experiments to compare, many would naturally have held that there was little or no economy in the steam-jacket; and it is only by having the extended series of experiments on the Bache, with and without the use of jackets on the same cylinder, that we are enabled to prove that there is economy in the use of the jackets; and by comparing experiments with engines of different sizes to show further that the actual performances of different engines are not directly comparable, while the relative performances for each engine, operated under different conditions, are properly comparable with similar relative performances of other engines.

(4 C.) It should be here observed that in the above comparison of the results of experiments with the steamer Bache and with the revenue steamers, the former shows more inferiority than can be attributed simply to the difference in size, and we are of the opinion that it was due somewhat to the quality of the steam furnished by

Digitized by Google

the boilers. The boiler of the Bache was constructed to give a high evaporation, and the combustion was so slow that the steam in the steam-chimney received practically little heat from the escaping gases. On the revenue steamers, the boilers were made to develop the maximum power for a given space—the tubes were shorter, the draft freer, and the experiments being tried at maximum power, the gases passed through the steam chimney at a higher temperature than on the Bache, so that the steam was more thoroughly dried. It appars incidentally, then, that a boiler with a less evaporative power than another, may, within certain limits, furnish steam of a better quality, and thereby produce increased economy in the engine. This is not fully demonstrated by these experiments, as both the size of the engines and the proportions of the boilers are different in the two series, but that there is some such compensation appears probable.

In these experiments, however, the higher evaporation in the boiler of the Bache, more than compensated for the loss of efficiency in the engine, the best results with the compound engine of the Bache and that of the Rush being as follows:

	Bache.	Rush.
	Table No. 1, Exp. 6.	Table No. 2, Exp. 1.
Water actually used per I. H. P., per hour.....	(line 46) 20.332	(line 53).....18.384
Water actually evaporated per pd. of coal.....	(line 53).....9 131	(line 63).....7.549
Coal consumed per I. H. P., per hour.....	(line 49).....2.227	(line 57). 2.435

The presentation shows that while there may be an interesting subject as to the compensation attainable in the engine by utilizing the waste heat of a boiler with low evaporative power, the higher evaporation will probably, as in this case, prove the better practically. One horse-power, would have cost but 1.838 pounds of coal per hour.

5. Economy of Steam as Influenced by the Steam Pressures Employed.—The investigations with which we have been associated show invariably that, other things being equal, the higher the steam pressure the greater the economy. The saving, however, decreases rapidly, using ordinary engines, after a pressure of eighty pounds per square inch is reached, so much in fact that it is doubtful if pressures in excess of one hundred pounds would give a sufficient economy of fuel to counter-

Digitized by Google

balance the extra expense in constructing and maintaining the boilers. We have little information as to what can be done at pressures above one hundred pounds, with engines particularly designed for the purpose, and it is probable that a saving of space occupied by the machinery might in some cases warrant the use of very high pressures even with ordinary engines. Within the limits of common practice, the saving by the use of the higher pressures is very important, and some valuable information on the subject may be obtained from the experiments under discussion. We first examine the results due to using different steam pressures in the same cylinder.

(5 A.) With the non-compound engine of the Dexter, we find, by comparing the experiments, that the minimum cost at the approximate steam pressures respectively of 70 and 40 pounds, that the power at latter pressure cost 20.73 per cent. more than at the former. This is at about the same degree of expansion, and therefore doing less work, with the less pressure. Were it necessary to do the same work, in the same cylinder, as is the case in practice, the power would cost 33.24 per cent more.

(5 B.) Experiments on the Bache, made at the steam pressures of 78 and 31 pounds, respectively, show a cost for the latter 29.6 per cent. greater than for the former.

(5 C.) In the case of the compound engine of the Rush, made with the steam pressures of 69 and 37 pounds respectively, the cost of the power at latter pressure is 20.18 per cent. greater than in the former.

(5 D.) The results due to working steam of different pressures in engines properly proportioned to give the maximum economy for the pressure used, involves questions discussed in the next title. Referring, however, to the results shown above, (5 A) and (5 B), it may be observed that if the lower pressure of steam is to be used, it can better be done in a cylinder proportioned as above indicated, and such was very nearly the case in the Dallas. Comparing experiments 11 and 3, where the power is nearly the same, we find that the power in the low pressure engines of the Dallas cost 13.01 per cent. more than in the high pressure condensing engine of the Dexter.

(5 E.) Above are shown, (5 A), (5 B) and (5 C), practical comparisons of the results due to reducing the steam pressure in the same engine, which furnish a basis whereby we may account for the fact that compound engines in practical use show

Digitized by Google

larger relative economies, compared with simple engines, than we have ascertained by experiment. In high pressure condensing engines, the pressure for various reasons is seldom maintained regularly at the point designed. This occurs from two causes, viz., carelessness of the operating engineer and the improper adaptation, by the designing engineer, of the size of the engine to the work it has to do. The latter, when true, as is too often the case, partially excuses the fault of the former, which subject is discussed in the next title. It is also true that no matter for what pressure the engine is designed, if it be intended to be operated with considerable expansion, the engineer soon finds that his engine works smoother with a lower pressure and less expansion; and naturally thinking, as is too often the case, that his duties are sufficiently arduous, lets his pressure fall or partially closes his throttle-valve and lengthens the cut-off for the most trivial excuses, until finally, notwithstanding his education and instructions, he really believes that it is exactly as well to work that way all the time.

The general prejudice against high pressure is in his favor, and it is not uncommon to have somebody on the vessel boast that their engineer can run with less pressure than somebody else, which is accepted as a matter to be proud of instead of being worthy of condemnation. To be sure, the expense account for coal increases somewhat, but it is attributed to the falling off due to continued service. If protestations of owners that something is wrong are repeated, and direct orders given to work more expansively, the result generally proves a failure; sometimes through lack of interest, and numerous complaints about leaky boilers, etc., and at other times trials are made of higher pressures when the engine really has got out of order and no saving can be observed. It is a fact that if the pistons have become leaky, it is as economical to use a lower steam pressure as a high one. The true remedy in such case is to refit the pistons and carry the pressure designed. We have of late, by the use of special arrangements, found no difficulty in keeping pistons continuously tight at any pressure.

(5 F.) With the compound engine, however, there are fewer mechanical difficulties in working high steam, and in most cases it is difficult to keep up the speed with low steam. For instance, examining the experiments with the compound engine of the steamer Rush, it will be seen that the power at the lower pressure is much less than with the higher (168.6 to 266.5), so that the engineer, with an engine of proper size, would be obliged to increase the pressure to obtain sufficient power

Digitized by Google

TITLE.		Number of experiments.	Ratio of expansion.	Mean effective pressure.	Cost in water per horse power per hour.		Number of experiments.	Ratio of expansion.	Mean effective pressure.	Cost in water per horse power per hour.
Table 6 A.		Line 1.	Line 7.	Line 25.	Line 46.		Line 1.	Line 7.	Line 25.	Line 45.
Abstract from general table No. 1, U. S. Coast Survey steamer Bache, non-compound engine, approximate steam pressure 80 pounds.	With steam-jacket in use on larger cylinder.	14	12.62	23.449	27.113	Without using steam-jacket.	11	11.82	21.643	35.075
		15	8.57	27.54	24.088		12	7.62	27.273	29.616
		16	5.11	36.94	23.154		13	5.32	32.328	26.247
Table 6 B.		Line 10.	Line 17.	Line 36.	Line 53.		Line 10.	Line 17.	Line 36.	Line 53.
Abstract from general table No. 2, U. S. Revenue Steamer Dexter, non-compound engine, approximate steam pressure 70 pounds.	.....	3	4.46	34.439	23.857		5	3.49	37.538	23.905
	.....	4	3.67	37.127	24.120		6	2.72	42.028	24.313
Table 6 C.		Line 10.	Line 17.	Line 36.	Line 53.	U. S. Revenue Steamer Dallas, engine non-compound, approximate steam pressure 35 pounds.	Line 10.	Line 17.	Line 36.	Line 53.
Abstract from general table No. 2.	U. S. Revenue steamer Dexter, (engine non-compound) approximate steam pressure 40 lbs.	7	3.34	25.583	28.802		10	5.07	18.522	26.687
		8	2.42	30.665	28.936		11	3.89	21.447	26.96
		9	2.08	33.838	31.786		13	2.94	24.611	28.901
Table 6 D.		Line 1.	Line 7.	Line 25*	Line 4.		Line 1.	Line 7.	Line 25.	Line 46.
Abstract from general table No. 1, U. S. Coast Survey Steamer Bache, compound engine, approximate steam pressure 80 pounds.	With steam jacket in use on larger cylinder.	4	16.85	20.379	25.108	Without using steam-jacket.	1	9.146	22.421	23.765
		5	9.19	27.524	20.713		2	6.658	27.599	23.036
		6	6.97	31.843	20.332		3	5.634	29.781	23.210
		7	5.73	33.484	20.365		..	....	....	....
		10	4.24	36.940	21.169		..	....	....	....

* Mean effective pressure referred to larger cylinder.

Digitized by Google

to propel his vessel at the speed designed. The result is that the average pressure carried for compound engines, even by careless engineers, is much higher than in single cylinder engines, and increased economy due to the steam pressure is obtained, independent of that due to the difference in engines; and we may expect to find in practice, as is commonly reported, that a compound engine operates with a saving of 20 to 25 per cent. compared with single engines using the same pressure, and that even more saving may be obtained when the single engine is greatly too large for its work, as hereinafter discussed.

THE MOST ECONOMICAL POINT OF CUT-OFF FOR THE PRESSURE EMPLOYED.—When it is desired to obtain a given power, using steam of a given pressure, fixing the point of cut-off fixes also the mean pressure in the cylinder, and for a given speed of revolution, the size also of the cylinder required. Our experimental researches show that the most economical grade of expansion varies for every steam pressure, and is influenced somewhat by other conditions.

The preceding tables have been condensed from the general tables, and show the mean pressures and costs of the power at different degrees of expansion for the engines of the several steamers.

Referring to Table 6 A, it will be seen that, with the engine of the Bache, operated non-compound, using an approximate steam pressure of 80 pounds, expanded 5.11 to 12.62 times, the higher grades of expansion were attended with positive loss; and by reference to Table 6 B it will be seen that, with the single engine of the Dexter, using an approximate steam pressure of 70 pounds, expanded 2.72 to 4.46 times, there was but little difference in economy between an expansion of 3.49 times and one of 4.46 times. We may, therefore, infer that an expansion of five times, under the conditions of these trials, using 80 pounds of steam, in single engines, is as much as can be obtained economically, and that the expansion should be somewhat reduced for a pressure of 70 pounds.

Referring to Table 6 C, it will be seen that, with the single engine of the Dexter, using an approximate steam pressure of 40 pounds expanded 2.08 to 3.34 times, (the latter expansion is the more economical) and that, with the engine of the Dallas, using an approximate steam pressure of 35 pounds, expanded 2.94 to 5.07 times, no loss, but rather a slight gain in cost of indicated power, is shown at an expansion of 5.07 times, as compared with that at 3.89 times—this engine operating, as before stated, very economically at the pressure used. The results at the two ex-

Digitized by Google

pansions last named are, however, so nearly identical, that the cost for the net power is least for the least expansion; considering the experiments on the Dexter and Dallas together, we may conclude that an expansion of 3½ to 4 times is the most economical degree for steam pressures of 35 to 40 pounds.

Referring to Table 6 D, it will be seen that, even with the compound engine of the Bache, operated with an approximate steam pressure of 80 pounds, expanded 4.24 to 16.85 times, a loss resulted at the extreme degree of expansion, and that an expansion of 6 to 7 times appeared to give the best results under the conditions of the trials.

It is not practicable, with the information available to calculate accurately the proper rates of expansion for different steam pressures, and it is probable that no fixed rule could be framed to include the modifications due to all conditions. We give the following provisional rule, with tabulated examples:

RULE.—To the number representing the steam pressure above the atmosphere (P) add 37; divide the sum by 22; the quotient will represent, approximately, the proper ratio of expansion (R) for that steam pressure. That is,

$$R=\frac{(P+37)}{22}$$

EXAMPLES:

Steam pressure above atmosphere=P	5	10	25	40	60	80	100
Ratio of expansion=R	1.9	2.1	2.8	3.5	4.4	5.3	6.2

It is probable that these ratios are nearly correct for single engines of large size with details of good design, too large for single engines of ordinary construction, and too small for the better class of compound engines. The rule, though provisional, is safer to follow than the uncertainties of personal opinion, and the variations of actual practice. Further information cannot vary it materially, for the economy changes very little for expansions considerably greater or less than the most economical grade. The limits of expansion for the higher pressures are apparently well defined by the experiments discussed; but there are indications that there is no loss in using somewhat higher expansions than given by rule for steam pressures of 35 to 40 pounds—of course, however, with results inferior to those obtained by using higher pressures.

As a general rule, in constructing an expansive engine, too much expansion is attempted, and the cylinder is made much too large for the work to be done.

Digitized by Google

This is particularly true in respect to engines designed to be operated expansively with high steam pressures. As previously referred to, the designing engineer, in almost every instance, furnishes too much cylinder to work off the steam from a given boiler at the most economical degree of expansion for the pressure intended. This is one of the most important lessons to be learned from these experiments. Nearly all the marine engines constructed have cylinders of sufficient size to develop the power intended with a mean pressure of 25 to 20 pounds, and even lower. These experiments show clearly that it is not economical to expand high pressure steam sufficiently to produce so low a mean pressure, and that with such large cylinders it would be nearly, if not quite as well, to reduce the steam pressure and expansion (as we have complained previously that the marine engineers are in the habit of doing, though to an unwarranted extent). The best results shown by these experiments were obtained with a mean pressure of 34 to 37 pounds, when the boiler pressures were from 70 to 80 pounds; and, therefore, the steam cylinders of non-compound high pressure condensing engines should be not more than two-thirds the size they are usually made. Engines so proportioned would not only work with greater economy, but also with less expansion than those with larger cylinders, so that there would be a more equable pressure throughout the stroke when high steam was used, and less trouble to the engineer. Such an engine, properly constructed and operated, would probably require but about 15 per cent. more fuel than the best form of compound engine to do the same work.

Digitized by Google

Digitized by Google

Design
for a pair of
Compound Marine Engines
Cylinders 30"&48" × 3'-0" stroke

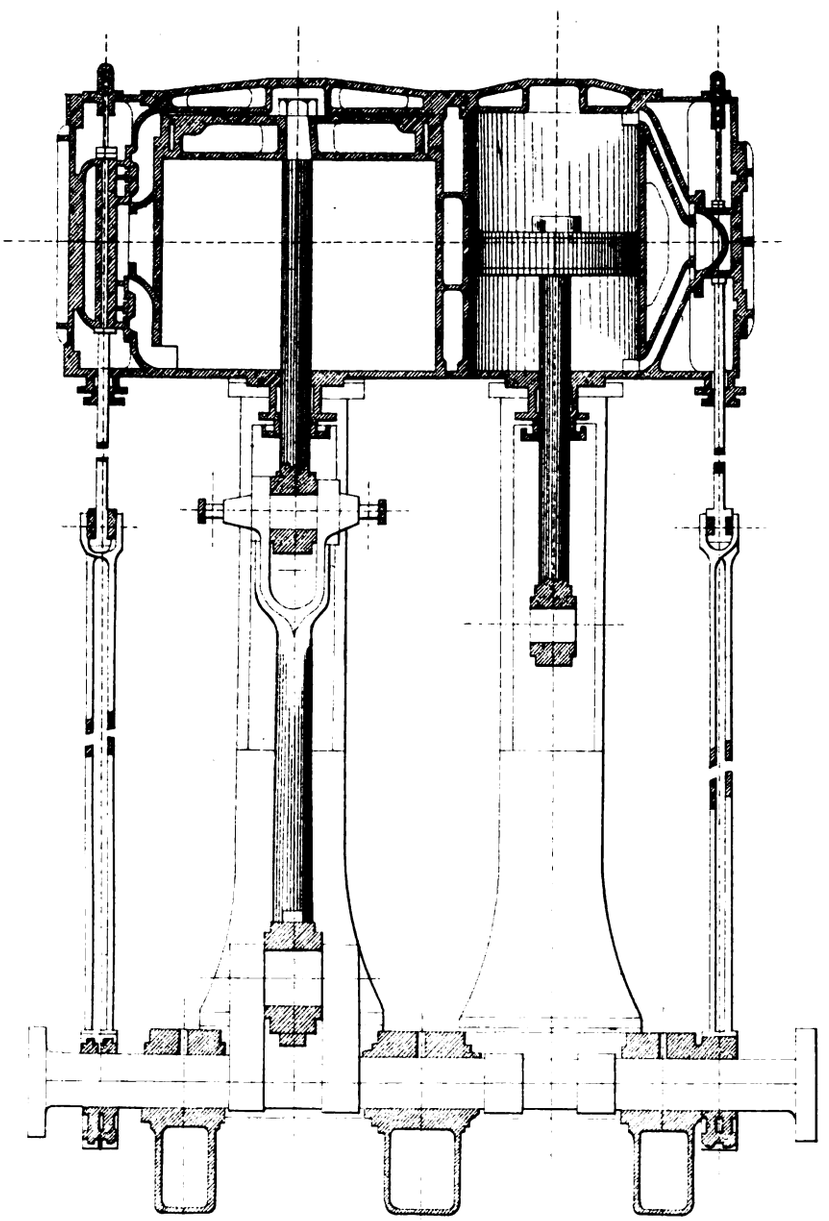

Digitized by Google

CHAPTER V.

HOW TO DESIGN A MARINE ENGINE.

In designing a pair of engines, every draughtsman will, in a measure, go about it in his own way, as every expert has a way peculiar to himself; but the young beginner needs some instruction, and these remarks will point out an easy way, and probably the best way.

Before getting out a working drawing from which the engine is to be built, it is customary to get out a rough sketch on a small scale—say, ¼ or ½ inch to the foot—the centre lines and principal parts only being shown. This sketch is for the purpose of making an estimate on, and deciding on the style of engine; consequently, calculations where not absolutely necessary are dispensed with, for the time being, and afterwards accurately worked out when laying out the engines to a larger scale. Plates I and II, show a sketch of the kind spoken of. The engines are a pair of vertical, inverted, direct-acting compound marine engines.

In getting up such a design, the centre line of the shaft is the base to work from, following with the centre line of the low pressure cylinder, and working *upwards* from the shaft. The diameters of the cylinders and length of stroke being known, proceed to mark off the length of the crank (half the stroke) upon the vertical line upward from the shaft, and then the connecting-rod (which should be not less than 2¼ times the stroke), then draw in the diameter of the piston rod (say $\frac{1}{10}$ the diameter of cylinder). Next draw in the piston rod, stuffing box and gland, being careful to give clearing space between gland studs and crosshead. Now put in thickness of metal (bottom of cylinder) and draw a line showing clearance at bottom of stroke, which should be $\frac{3}{4}$ of an inch. From this line mark one length of stroke upward to underside of piston, then the depth of the piston ($\frac{1}{3}$ diameter of cylinder) then piston rod next, and $\frac{1}{2}$ inch for clearance on top stroke. Draw in cylinder head, centre of which should equal $\frac{1}{3}$ diameter of cylinder. This fixes the *height* of the engines. The cylinder covers should now be drawn in complete, showing the correct width of the flanges, the centre of the high pressure cylinder being decided by the flanges of the covers—the two cylinders being kept as close to each other as

Digitized by Google

the flanges will permit, but at the same time sufficient space must be left between the bodies of the cylinders for the core required in moulding. If the cylinders are to be steam-jacketed, the width thus taken up would regulate the distance between the two cylinders and the engine centre. The centre of the high pressure engine being now fixed, the diameter and length of cylinder and cylinder cover can be put in, as was done in low pressure cylinders, but leaving out the piston and crosshead until their position can be ascertained from end view or section. The crank shaft, cranks, crank-pin, and bearings, can now all be placed in position. When all pertaining to the shaft bearings, etc., are put in, the next thing to ascertain is the distance of the valve face from the cylinders and centre line of valve stems. The line of the valve face is decided by the area of the exhaust port, which should be about $\frac{1}{8}$ the cylinder's area—the area of the steam ports being about $\frac{1}{16}$ area of cylinder.

The centre line of the high pressure valve stem is kept as close to the valve face as the length of the main bearings will permit in placing the eccentrics, and a line drawn from between the eccentrics vertically gives the centre line of the valve stem.

Attention should now be directed to the end view of the engines, in the section of the engines looking aft from the forward side. Plate II, shows a half section of the engines upon opposite sides of the centre line, with the relative positions of cranks and pistons. The position of the after crank is on the top centre, corresponding to the position shown on the sectional elevation. The forward crank lies horizontally at right angles to the after crank, and the position of the piston is therefore a little below half stroke, on account of the angularity of the connecting rod when measured upwards from the crank pin. The height of the centre line of the air-pump lever is placed so that the small end when at the top stroke will clear the stuffing-box glands, etc., of the cylinders, and also clear the top of the condenser when at the bottom stroke. The end of the lever when at half stroke projects past the centre line of the engines, equal to a distance of half the versed sine of the arc described; the centre line of the air-pump is a perpendicular line drawn from half the versed sine of the arc described by the short end of the lever. The length of the levers is in a great measure determined by the capacity and surface required in the condenser, and by the space taken up by it. The valve link is shown at half stroke, and the position, when going ahead or astern, by dotted lines to show that everything is clear. The eccentrics are shown in their relative positions with the low pressure crank when on the top stroke. The valves and links being at half stroke, and

Digitized by Google

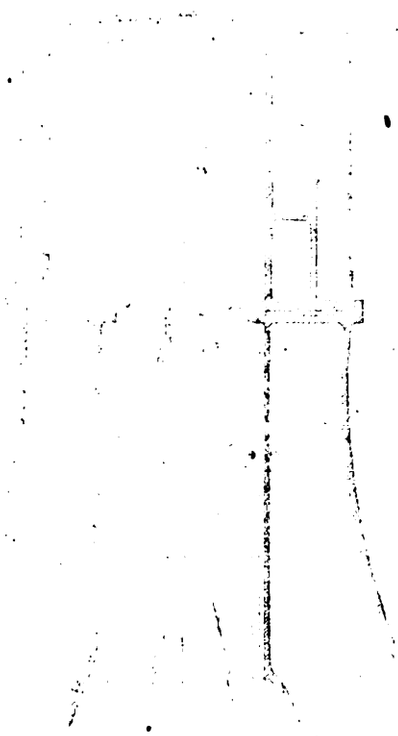

Digitized by Google

Digitized by Google

Design
for a pair of
Compound Marine Engines
Cylinder 30" & 48" — 3'-0" Stroke

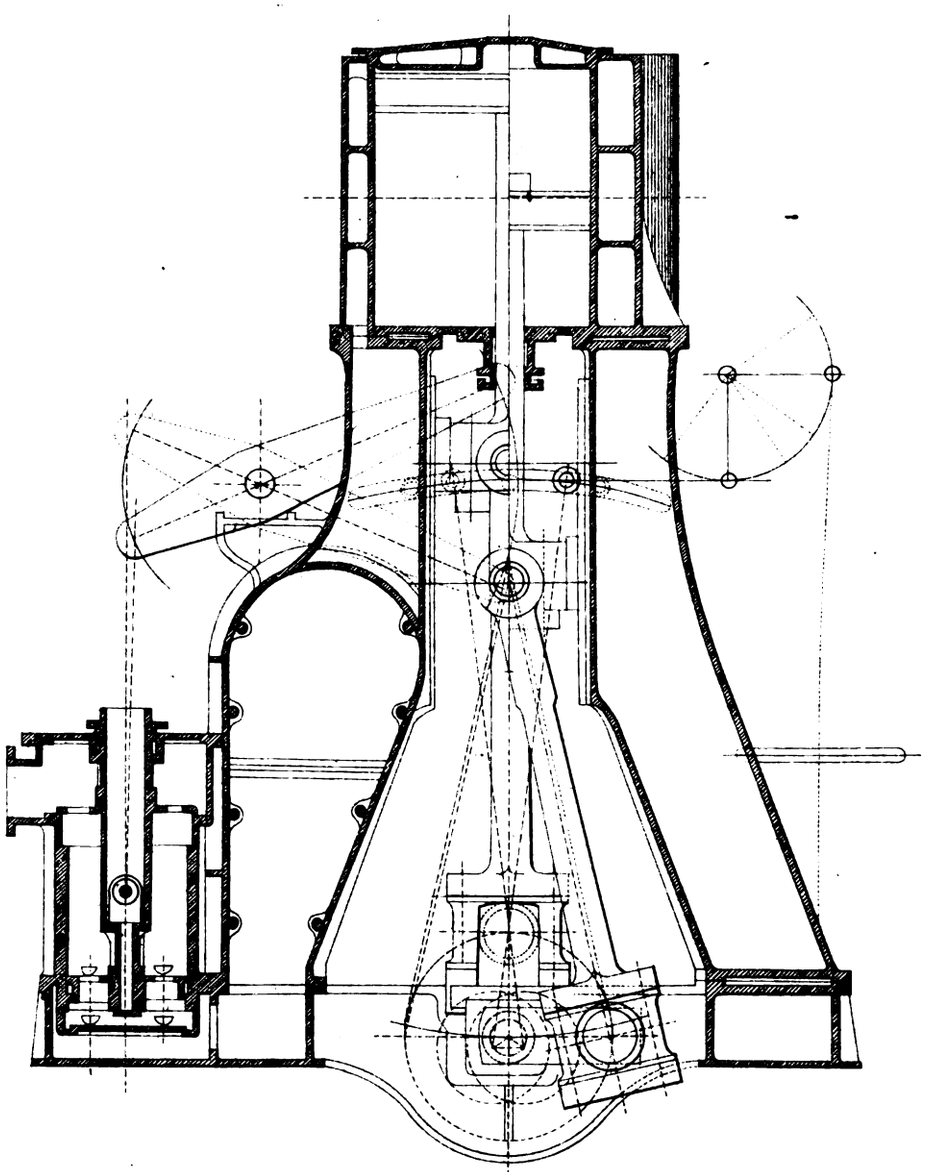

F. Bourquin Lith. Phila.

Digitized by Google
UNIV. OF MICH.

Digitized by Google

the piston and crank at the top stroke, the centre lines of the eccentric rods are not shown as they would appear if the engines were working, as the link would be thrown back until the eye of the forward eccentric rod was in line with the centre line of the engine; but it is usual to show them in this way to facilitate the working out of the design, the correct lengths being afterwards given with the details. In placing the eccentrics, a circle is described upon the centre of the crank-shaft, equal in diameter to the throw of the eccentrics. Upon the vertical centre line downwards is marked off a distance equal to the lap and lead, and a horizontal line drawn cutting the circle at each side. Angular lines are now drawn from the centre to these intersections, which lines are the centre lines of the eccentrics, and the points of intersection the centres, the eccentric rods being crossed when the crank is on the top stroke.

The width of the crank-pit is made great enough to clear the crank end of the connecting rod when at half stroke. The columns are in the same proportion as for hollow cast iron columns bearing a compressive strain—spread out at the bottom to allow for the lateral stress and required stability, when the vessel is rolling. As regards the proportions of engines, weight and strength of material, they can only be reduced to a nicety by the experience gained from an extensive practice; still the examples and proportions of details met with every day in the shops and on shipboard, as well as those furnished throughout this book, will prove of great service to the student, when required for filling in a centre line or skeleton design of a pair of marine engines such as here given. The following proportions by Mr. J. Donaldson, one of the most talented engineers of the present day, are given as the results of a most successful practice:

Crank pin = diameter of the shaft.

Thickness of brass bearings at the bottom $\frac{1}{5}$ diameter of shaft.

Thickness of brass bearings at the top $\frac{1}{7}$ to $\frac{1}{10}$ diameter of shaft.

Total length of all bearings = to 6 times diameter of shaft.

Area of steam port = $\frac{1}{16}$ area of cylinder.

Area of exhaust port = $\frac{1}{8}$ area of cylinder.

Diameter of valve stem = *about* $\frac{1}{8}$ diameter of piston rod.

Diameter of piston rod = about $\frac{1}{10}$ diameter of cylinder.

Clearance = $\frac{5}{8}$ to $\frac{3}{4}$ inch; latter at the bottom.

Depth and thickness of piston = $\frac{1}{5}$ diameter of cylinder.

Digitized by Google

Width of eccentric strap equals twice the diameter of the bolts + $\frac{1}{8}$ for side clearance; area of each bolt = $\frac{1}{2}$ area of valve stem.

The capacity of the air-pump = $\frac{1}{12}$ that of the low pressure cylinder; and capacity of circulating pump = $\frac{1}{30}$ of the low pressure cylinder.

An allowance of fifty pounds per square inch is made for the pressure on the guide surface. This pressure is obtained by dividing the pressure on the piston by the ratio of the length of the crank to the length of the connecting-rod.

Area of steam pipes = $\frac{1}{12}$ area of high pressure cylinder.

For rule for estimating proper size of cylinder, (see Chapter III.,) on The Theory of the Compound Engine.

Digitized by Google

Digitized by Google

Plate II

Front view

End section

Longitudinal section

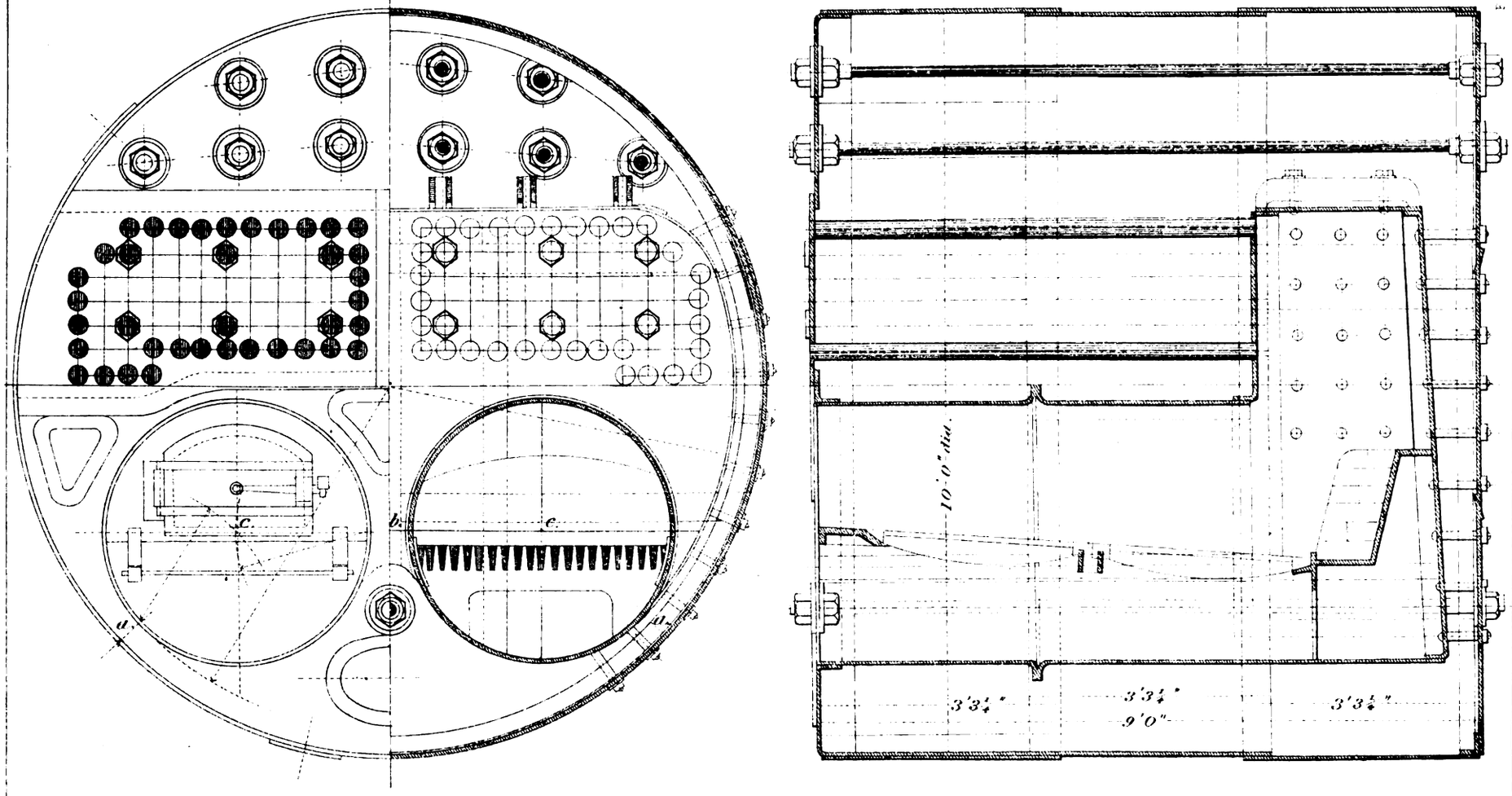

Design for a

Circular Marine Boiler

Scale ½ inch per foot

Digitized by Google

Digitized by Google

CHAPTER VI.

HOW TO DESIGN A MARINE BOILER.

To design a marine boiler may seem at first sight to be a very simple affair, but if all the particular duties and requirements of a really good and efficient boiler be taken into consideration, it will be seen that there are many difficulties and necessities involved which make it by no means a light or easy task. Among other data to be taken into account are the following: Efficient evaporative qualities; economy of coal consumption; strength to resist pressure and strains due to alternate expansion and contraction; heating surface; grate surface; good circulation; prevention of foaming; easy access to all parts for examination, cleaning and repairs; facility for construction; size of plates; cost to build, and space occupied in the ship. In proceeding to design an ordinary cylindrical shell boiler (see Plate III), in the first place the diameter of the outside shell is decided upon by the amount of steam required, and the space allotted for that purpose in the ship.

The most important parts are, first the diameter, which decides the thickness of the plate; secondly, the diameter of the furnace flues; and then grate surface; tube surface; height of tubes; arrangement of stays. The size of the furnace can seldom be made as large as desirable in a cylindrical boiler, as their diameters are dependent upon the available space in the lower segment of the boiler. If they are placed too high, which would be the case if the diameter were much increased, a larger space would be left below the bottom, leaving an undue quantity of water in the coolest part of the boiler, and likewise the height of the tubes would be increased, and the water surface be raised above its proper level; but the furnace flues should be made as large as possible, and placed as near the bottom as is consistent with the space obtainable and the circulation of the water. Small and contracted furnaces are the chief cause of the ineffiency of this class of boilers, causing incomplete combustion and a consequent waste of fuel. When the grate bars are covered with 8 or 10 inches of coal, a very small space indeed is left for the proper combustion of the fuel. But as large furnaces require large shells, and large shells add to the size, weight and difficulty of manufacture, sixteen feet diameter is about

Digitized by Google

the utmost limit to which this type can go, and therefore it is an open question how long it will be the standard for marine purposes. As a shell boiler it cannot be improved upon; but progress demands a better one, and if abandoned the engineer must look to the water-tube system (after the manner of the Perkins boiler) to supply the demand long felt for a marine boiler which will carry not less than 100 pounds per square inch with safety.

In proceeding to *draw* a boiler, on the front elevation (see Plate III.) describe the diameter of boiler and thickness of plate. With the radius of the inside diameter less 6 inches, set off the water spaces AA, also mark off the vertical water space B, which in no case should be less than 6 inches. Then with the radius or half the diameter of the furnace flue, set off from B the vertical centre line of the furnace C, and with the same radius from A bisect the centre line C, to find the horizontal centre line and centre of flues. Describe the circle showing flues and thickness of plate, and next proceed to portion off the division of tubes, leaving a clear space of not less than 6 inches between the lower row of tubes and top of crown sheets. Having fixed the centre line of the bottom row, and the inside vertical row, proceed to divide the plate upwards and outwards, allowing not less than 1 ¼ inches between each tube. The tubes are placed vertically and horizontally for the double purpose of cleaning and scaling, and to impede as little as possible the ascending currents and steam. The height of the top row of tubes, which is of considerable importance, should be kept as near the centre line of the boiler as the number of tubes and size of boiler will permit, for the reason that the superficial surface of the water is greatest at this point, and the higher the water level is raised the less the area becomes, owing to the increased curvature of the plates; and more of the evaporation of the steam is reduced, which leads to violent and dangerous foaming, and carrying away of large quantities of water with the steam to the engine. This is a matter which deserves the greatest attention from the designing engineer.

In arranging the position of the tubes and furnaces, it is often of great assistance to draw the rows of tubes and furnaces on a piece of tracing paper, and shift it about on the boiler until their proper position can be decided on, and this will save the drawing from becoming disfigured by erasures. The length of the boiler, if not otherwise specified, is determined by the amount of grate surface required, the length of the bars being generally about six feet. The shell is divided into three rings, so that the plates may be of equal width; the front and back rings are composed of

Digitized by Google

three plates, arranged in such a manner that the joints are clear of the narrow water spaces at the furnaces, and that three row rivets may be avoided as much as possible. The middle ring is of four plates joined at the top, bottom, and the sides, the plates in each separate ring being joined by butt straps inside and outside. The length of the plates in the front and back rings is ⅓ the mean circumference of the rings; that is, the circumference of 10 feet, the diameter of the inside of the plate, + ½ inch a side, or 10 feet 1 inch, the plates being 1 inch thick. The length of the plates in the middle ring is ¼ the circumference due to the diameter of 10 feet, — ½ inch a side, or 9 feet 11 inches. The butt straps are double chain riveted, that is, in a line and not zig-zag, the outside butt strap of the front and back rings overlapping the seam of the next plate, and the inside butt strap stopping short at the edge of the lap, and *vice versa* with the butts of the middle ring. The front of the boiler is composed of three plates, flanged to meet the shell; the lower part is made up of two plates welded across the narrow parts, in line with the centre of the furnaces. The openings for the furnaces are flanged to meet the plates of the furnace flues. The tube plate is composed of two plates riveted together in the centre, the width of the plates being determined by the total depth of the tubes, sufficient allowance being made for the laps—the top seam being always kept clear of the water level, otherwise the rivet heads would corrode away very rapidly from the decomposition of the steam and extra thickness of the plating. The top plate is in one piece, and is governed by the height of the tube plate. This plate should be protected from the flame in the uptake by a screen, as it is liable to become overheated by the direct impact of the flame; there being no protection from the water on the inside, the steam naturally undergoes decomposition and starts a most rapid corrosion on the plate. The expansion of the iron is also greater at this point than any other part of the boiler, due to the increased temperature.

The back part of the boiler is composed of three strakes of plates running horizontally; the top and bottom segments of the circle are in one piece, the middle strake is made up of two plates joined in the centre, the whole being double riveted together and joined to the shell by an angle-iron ring. The back tube plate is composed of two plates, joined together in the centre and flanged outwards round the top and side to meet the top and side plates of flame-box, and inwards at the furnace ends to meet the top plates of the furnace flues. The back of the flame box is composed of three plates running vertically, lap-jointed together, and flanged

Digitized by Google

all round to meet the other plates composing the top, sides, and bottom of the flame-box, the top and sides being of one plate each. The furnace crowns are of two plates, flanged at their junction with each other, and butt jointed to the bottom plates under the grate-bars. The back plate of the furnace bottoms extends to the back plate of the flame-box, and joins the bottom of the flame-box; these two bottom plates being joined together in the centre by an arched plate worked in to fit. The plates of a proposed boiler may be more fully shown if an expanded plating plan be laid out to scale, with all the seams, laps, and joints depicted upon it, from which any templates required can be made, also from which the plates can be ordered. The staying of the steam space or upper part of the boiler should be pitched as carefully and equally as possible; each stay should have its own proportionate area of plate to support, no more nor no less than the others; and the stays should be of such size as to divide proportionately into the surface to be stayed, and also to admit of free access to the boiler for cleaning and examination purposes, and should also be in line with the vertical rows of tubes, so that there shall be no obstruction to the water spaces. The pitch from the shell of the boiler to the centre of the outside stays should be the same as the pitch from each other. The larger the section of the stay, the more room there would be inside the boiler, but their size should not be out of proportion to the thickness of the plate they have to carry, otherwise they would buckle to the excessive rigidity of the stay over that of the plate, in proportion to the larger area it would have to support. The screwed ends are made larger than the body of the stay, so that the diameter at the bottom of the thread equals the section of the whole bar throughout. The small stays at the back and sides of the flame-box are equally of importance; but as they are smaller and there are more of them, they can be much more easily divided, care being taken to avoid laps and seams.

A good deal might be said here upon the subject of boiler designing—in fact, a volume might be written upon that subject alone—but space forbids it in this work, and so we will confine our remarks to the one in question.

In this or any other cylindrical boiler, if a slice could be taken off the bottom underneath the flues, which part is worse than useless for evaporative purposes; also a slice from off both sides, we would have a better steaming boiler; but as that would leave it of a square or rectangular form, it would not answer for high pressures. And again, if the depth of the furnace could be increased to about twice the usual

Digitized by Google

diameter, we would burn less coal and have more efficient heating surface; but as before, the form necessary to suit the cylindrical boiler would not be strong enough. Hence, for these and many other reasons, it will be seen that this type of boiler, as before remarked, for marine purposes, is far behind the advanced stage to which the modern compound engine has been brought. The expansion throughout this boiler is very unequally divided, the plates elongating much more at the top than at the bottom, and the top of the furnaces at the back; and top and back of flame-box expand much more than the bottom or front plates. The flames in the furnaces are choked in the very beginning by being too confined, and when they reach the tubes are damped out nearly altogether; and hence assuming that the cooling contact is the cause of the extinction, the flame-box (back connection) appears to be the only real effective heating surface.

Now, having plainly pointed out the merits and demerits of this type of boiler (the only kind worthy of notice at present in use for marine purposes), the student will be able to avoid the one and adopt the other, in the meantime looking to the water-tube type as the steam boiler of the future.

Rules for proportions of marine boilers:

Boiler power—Speed of piston in feet per minute × by area of cylinder in feet × by number of cylinders × by 60 = the cubic feet of steam per hour; and this ÷ by the specific volume of steam at the given pressure = cubic feet of water required; and the cubic feet of water required × 62 and ÷ 9 and × 22 equal the square feet of fire grate required—the rate of expansion not being taken into account.

Ratio of heating to grate surface = 35 to 1.

Area through tubes = $\frac{1}{8}$ of grate surface.

Area of funnel = $\frac{1}{8}$ of grate surface.

The heating surface to be taken into account is as follows: Top half of flues, top and sides of flame-box (back connection), above centre line of flues, back tube plate and the tubes.

To find the thickness of plates for boiler shells:

$$\frac{\text{Mean diameter in inches} \times \text{pressure}}{5000} = \text{thickness.}$$

$$\frac{\text{Twice the least thickness} \times 5000}{\text{Diameter of shell in inches}} = \text{safe pressure.}$$

Digitized by Google

Boiler stays: The area supported by each stay should not exceed 5000 pounds per square inch.

$$\frac{\text{Area and pressure on boiler}}{5000} = \text{area of stay.}$$

Screwed boiler stays at back and sides of flame box.

8 inch pitch at 60 pounds for 1⅛ diameter of stay.

7½ inch pitch at 70 pounds for 1⅛ diameter of stay.

6¾ inch pitch at 80 pounds for 1⅛ diameter of stay.

Grate-bars: Short grate-bars are better than long ones on account of expansion. Arched brick bridges are better than flat ones, as they distribute the flame more equally.

Digitized by Google

Digitized by Google

Design for a
Screw Propeller

B.

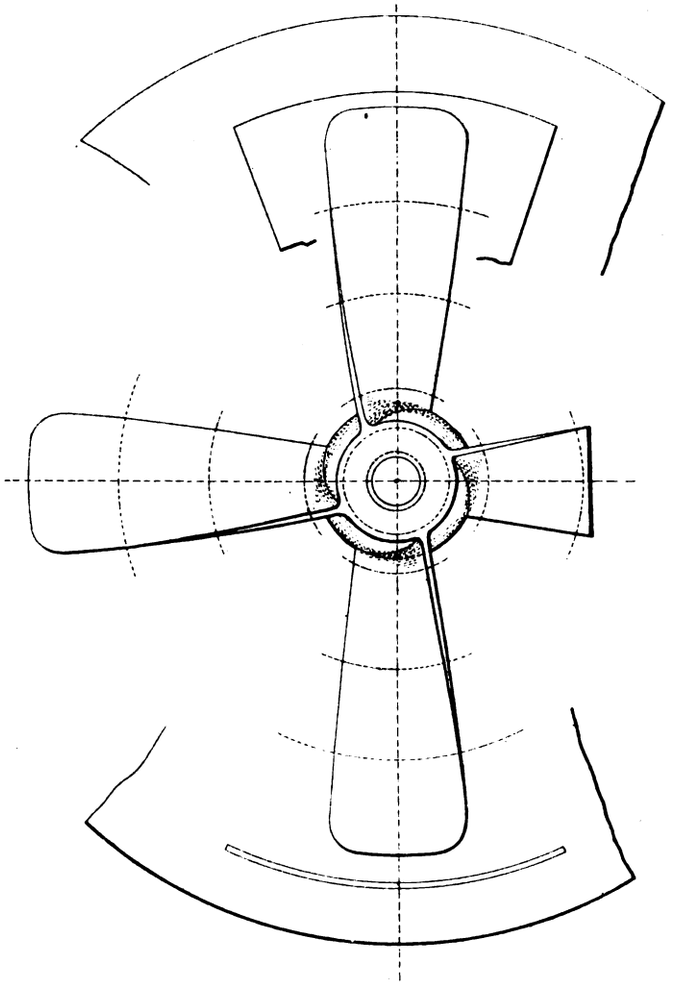

A.

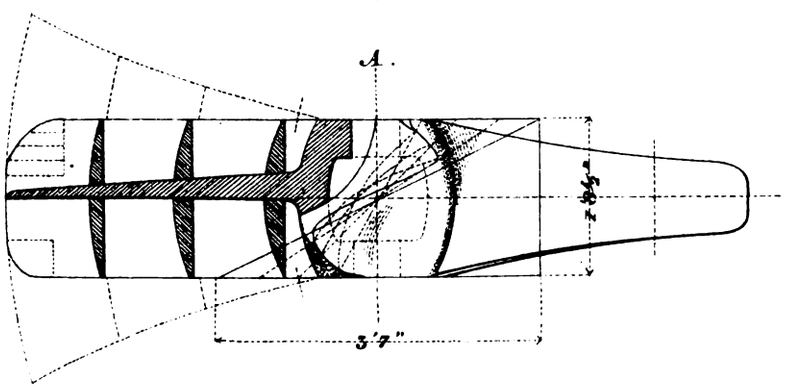

Digitized by Google

CHAPTER VII.

HOW TO DESIGN A SCREW PROPELLER.

In the first place, the variation of the lines and displacement of the vessel and the speed required decide the pitch. The diameter of the screw is a ratio of the mid-ship section, and should be as large as the draught of the vessel will permit. In getting up a *working* drawing for the pattern shop and foundry it is only necessary to give the angle; section of metal; the expanded length; and particulars about the hub; all these can be given in one view, and are quite sufficient to enable the screw to be made. When it is necessary to show other views, such as effective and disc areas, they are projected from the angled blade as shown in Plate IVA.

In this illustration the length of the propeller is $\frac{1}{7}$ of the pitch; the diameter being 8 feet; the pitch 12 feet; and it is a four-bladed true screw. One-seventh of the pitch = to 1 foot $8\frac{1}{2}$ inches, which is divided off upon the horizontal centre line on each side of the vertical centre line; lines drawn through these points form the length of the hub. These lines thus formed are continued, the one to the left upwards and the one to the right downwards, and upon these lines you divide off above and below the centre line $\frac{1}{7}$ of the circumference. Now, the circumference of a circle 8 feet in diameter is (8 × 3.1416) 25.13 feet, which divided by 7 gives 3 feet 7 inches = to 1 foot $9\frac{1}{2}$ inches above and the same below the horizontal centre line of the screw. Now join the two extreme points of the angle thus formed and form the hypothenuse of the angle, which is the angle of the blade, and also the oblique length of the blade at its periphery. Next show the expanded blade as shown in the upper part of Plate IVA. Now divide the blade into a number of parts, which in this case is four—and likewise divide the continued lines at the end of the hub into the same number of parts and connect the points, which gives the angle at each division in the radial length of the blade corresponding to their respective radii. If these lines be measured off with the dividers and placed consecutively upon the ordinates of the expanded plate and the points joined with a curve, forming the edges of the blade, the complete length of the expanded blade would appear as shown

Digitized by Google

upon the dotted lines. The curve forming the outer edge of the periphery is the side of an ellipse, which it is well known is produced by cutting a cylinder obliquely, the side of the angle representing the circumference being equal to the diameter of the cylinder, and the hypothenuse of the angle, the oblique angle by which it is cut. In practice, however, it is near enough to take the diameter of the screw for the radius by which this arc is described. The expanded length is usually cut down to suit the ideas of the designer regarding the effective area of surface. The form of the blade is made, in this example, with the edges parallel to the centre line, and of equal length with the hub, the corners being rounded off to suit the eye, the leading corner being most cut away, because such a design gives good results in practice. Now, having drawn the expanded blade, the next thing to do is to put in the metal, a vertical section being shown in the centre of the expanded blade. In good practice it is the custom to allow $\frac{1}{2}$ inch of metal (if of cast iron) at the root for every foot of diameter of the screw; $\frac{3}{8}$ inch, if of brass; and $\frac{5}{16}$ for steel. In our example the diameter being eight feet, the thickness at the root is 4 inches, tapering down to $\frac{3}{4}$ inch at the points. The cross section of metal should also be shown upon the ordinates of the blade, and also upon the corresponding angles obliquely. The edges of the horizontal blade, as seen on the angle, are described by a radius from the centre. The diameter of the hub is equal to its length and also to the radius by which the outside curve is struck. It is plain to be seen that if the necessary dimensions be figured upon the drawing, such as the size of the constructive angle, the metal at base and top of blade, metal in the hub, the taper of the shaft, the radius at leading and following points of the blade, etc., that it will be quite sufficient for a working drawing, from which a propeller can be made. But as it may be desirable to show the screw as it would appear in reality, two other views are necessary, which are both projected from the length of blade as shown on the angle. The blade as seen on the lower part of Plate IVA is the effective area of the blade, and is seen as it would appear when looking at it athwartships—the length at the ordinates are projected down from the corresponding lines upon the angle, and the edge drawn in with a baton. The disc area, or the area of the circle described by the radius of the screw, is shown in Plate IVB as seen when looking forward upon the face of the propeller from the after side, the radial lines of the blades being divided by concentric area of circles corresponding to the division of the blades in Plate IVA. The widths of the horizontal blades are projected from the corresponding

Digitized by Google

widths upon the angles in Plate IVA. the vertical blades being made similar to the horizontal ones.

Terms relating to screw propellers explained:

The "axis" of the screw is the imaginary centre line through the shaft in a fore and aft direction, and upon which, the propeller may be supposed to revolve.

The "radius" of the screw is half of the diameter, or a radial line running from the centre toward the edge or periphery of the screw.

The "length" of a screw is its length on a line parallel with its axis, or measured on a line in the direction of the shaft.

The forward edge of the blade is the "leading edge," the after edge is the "following edge."

The "radial length" of a blade is its length measured from the outside of the hub to the periphery in direction of the radius.

The "pitch" of a screw is the distance between two threads; when working in a *solid* nut it will advance the distance of its pitch at every revolution or complete turn, but as the water (which acts as a nut to the screw propeller) yields slightly, the screw does not advance its full pitch, and the difference is called the "slip" of the screw.

A "true screw" has a uniform pitch throughout every part of the blade. When the forward part has less pitch than the after part of the blade, it is said to have a varying pitch or expanding pitch longitudinally; and when the outer part has a different pitch from the inner part of the blade, it is said to have a varying pitch radially. The "angle" of the blade is the acute angle included by a plane at right angles to the axis and the after face of the blade.

The "oblique area" is the area of the driving surface measured obliquely. The "centre of pressure" is that portion of the blade around which the forces exerted by the blade will counter-balance each other. The "effective area" of the blade is the projection of that blade as seen on a plane at right angles to its axis. The "disc area" is the area of the circle due to the screw diameter. The "helix" is the spiral line described by the blade in its progress through space. A "right-handed" screw is one which turns from left to right when going ahead; a left-handed one is the reverse.

Digitized by Google

CHAPTER VIII.

ENGINES AND BOILERS OF THE UNITED STATES STEAMERS "ARBUTUS," "LAUREL," "PANSY," AND "FISH HAWK."

Designed by Charles W. Copeland, (Consulting Engineer U. S. L. H. Service,) and Constructed—"Arbutus," by Malster & Reaney, Baltimore, Md.; "Laurel," by Malster & Reaney, Baltimore, Md.; "Pansy," by Baird & Huston, Philadelphia, Pa.; "Fish Hawk," by The Pusey & Jones Co., Wilmington, Del.

THE "Arbutus," "Laurel," "Pansy," and "Fish Hawk" are light draft twin screw steamers of the following dimensions:

Length from rabbet to rabbet on 7 feet water line,	144 feet, 6 inches.
Breadth of beam, molded,	25 feet.
Depth of hold amidships,	10 feet, 8 inches.
Shear, forward,	4 feet, 4 inches.
Shear, aft,	1 foot, 9 inches.

Rigged as a fore-and-aft schooner, with pole topmasts.

They are now all in active service. They have proved themselves most excellent sea boats, fast—making as high as fifteen miles per hour—very economical in coal, and the machinery leaving nothing to be desired. By means of their twin screws, they can be turned in their own length—as the writer has repeatedly seen them do.

These engines (Copeland's patent) are undoubtedly the best design for *twin screw* steamers yet brought out, and their success will no doubt lead to their general adoption in all screw steamers requiring a light draft of water, or where the navigation is intricate.

SPECIFICATIONS FOR ENGINES AND MACHINERY.

General Description.

There will be two propelling screws, right and left handed, one under each counter; each screw driven by one inverted-cylinder, surface-condensing engine, 22 inches diameter of cylinder, and 27 inches stroke of piston.

The two engines will be fitted on one bed-plate; the surface-condenser common to both engines to be located between the engines and to form a part of the framing for them.

Digitized by Google

The center of the cylinder will be about 48¾ feet forward of the sternpost; athwartships, the distance apart of the shafts will be about 8 feet 8 inches; the upper part of the engines will be inclined toward the center line of the vessel, the centres of the cylinders at upper end being about 36 inches from centre to centre, athwartships.

There will be one overhead return-flue boiler, 8½ feet diameter of waist and 21½ feet in length, with steam-chimney 6 feet 2 inches diameter outside, and 10½ feet high.

The water of condensation to be supplied by an independent steam-pump.

The valve-chests to be on forward side of cylinders; main valves worked by a link-motion; the cut-off valve to be worked on a separate face within the main steam-chest, and operated by a link, one end of which is connected to an eccentric and the other to a *concentric* disk on the main shaft.

The air-pumps will be trunk-plunger pumps, driven by cranks on forward end of main shafts; the feed and bilge-pumps will be driven from the same motion.

The Frontispiece, Plate V, exhibits the general arrangement of the engines.

Cylinders.

Cylinders to be 22 inches diameter, and, for a stroke of piston, 27 inches. Steam openings 2 inches wide by 14 inches in length; exhaust-openings 3½ inches wide by 14 inches in length.

Cylinders to be accurately bored and flanges faced; bottom-head to be cast with the cylinder. All necessary flanges, lugs, and nozzles, etc., to be cast on cylinders for the various connections and attachments.

Lower end of cylinders fitted with a small bonnet, with stuffing-box and gland, both bushed with composition; also, a composition waste or drain-valve, ⅞-inch diameter, arranged so as to be self-acting or worked by hand.

Cylinders and steam-chests to be felted, and handsomely cased with black-walnut staving, fastened with brass bands and screws; the necessary valves and pipes for applying the indicator to be furnished and fitted complete.

Framing.

The main frame for carrying the cylinders will be the surface-condenser, which is to be properly designed, and strongly ribbed and bracketed for that purpose; the outboard sides of the cylinders will be supported by two wrought-iron columns or

Digitized by Google

braces to each; braces to be not less than 2¼ inches diameter, and to be turned and finished the whole length; the ends of these braces to be fitted to flanges of the lower end of cylinders and to the bed-plate, each end to be fastened by two bolts or screws 1⅛ inches diameter.

Steam-Chests.

Steam-chests either to be cast with the cylinders or fitted with face-joints and well bolted to cylinders; all joint-faces to be planed; covers planed and finished, and fastened with finished bolts and nuts; set screws to be fitted to covers to start them off the joints.

Within the steam-chest is to be properly fitted a false face for cut-off valve; this face to be so fitted and fastened that it can be readily removed in case of necessity, for access to the main valves.

All necessary nozzles for steam-pipes and valves to be cast on chest, and flanges planed; steam-chests to be fitted with a suitable tallow-cup.

Pass-Over Valve.

In this cut-off face is to be fitted a screw valve for a pass-over valve, 2½ inches diameter; valve, seat, and stem to be of composition; this valve to be worked by a hand-wheel in front of chest.

Relief-Valve.

There is to be a composition relief-valve, ⅞ inch diameter, properly fitted and attached to steam-chests and to exhaust-connection to condenser.

Slide-Valves.

The valves to be of cast-iron, of as different texture from the iron of the seats as possible, and scraped to a tight-bearing surface.

The main slide-valves to be of an ordinary **D** form; for steam-openings, 2 inches by 14 inches, and exhaust-openings, 3½ inches by 14 inches; and to be worked by a "Stephenson" link-motion; the link to be case-hardened and link-blocks of composition; proper hand-gear to be arranged for working the link.

Cut-Off Valves.

Cut-off valves to be of cast-iron; each a gridiron valve with two openings, 1¼ inches by 13 inches long; the valve to be worked by a link, one end of which is worked by an eccentric and the other end held in position by a *concentric* disk on crank-shaft.

Digitized by Google

Proper hand-gear to be arranged for changing and marking the points of cut-off and holding the link in position.

Cylinder-Heads.

Upper cylinder-heads to be well ribbed, turned, and polished; heads to be recessed for nut of piston-rod and for heads of follower-bolts; wrought-iron eye-bolts to be fitted for lifting the heads, and set-screws to be fitted for starting off the heads.

Bed-Plate or Frame.

Bed-plate or frame to be of cast-iron, in one piece; to be hollow, of the box form of section, and not less than 14½ inches in depth, with all the necessary passage-ways for water, bosses, and nozzles or flanges for pumps, pillow-blocks, etc., and flanges or lugs for bolting in place.

A raised surface or flange for the condenser to be cast on to receive flange of condenser.

All surfaces for flanges, pumps, hand-hole plates, pipe-connections, etc., to be planed.

A light cast-iron pan to be fitted under each crank-shaft to receive oil and drip from journals.

Surface-Condenser.

The surface-condenser to pass water through the tubes, and to have a cast-iron shell, ⅜ inch thick, well ribbed and strongly bracketed, to serve as a frame for engines; to have the necessary seating for cylinders and for slipper-slides cast on; to be cast with all proper man- and hand-holes, seats for pillow-blocks, nozzles, valves, flanges, and lugs, for all necessary connections and attachments; all bearings and joint surfaces to be planed.

Suitable bonnets to be fitted for access to all valves, tubes, etc.

Condenser to be fitted with horizontal tubes, having not less than 900 square feet surface of yellow metal tubes, ⅝ or ¾ inch diameter, and tinned both inside and out side; tube-plates to be of cast-iron, not less than 1½ inches thick, planed on all joint surfaces, and bolted in place with composition standing-bolts; tubes to be packed with "Allen's" wood or patent paper packings, or other approved packing.

The tubes to be arranged in three nests or sets, so that the refrigerating water will pass three times through the tubes.

The condenser to have suitable nozzles cast on for attaching injection-pipes, to convert it to a jet-condenser if necessary.

Digitized by Google

There is to be fitted to the condenser a screw-valve, 1½ inches diameter, with composition valve-seat, and screw, connecting salt water with the fresh, as a supplemental feed-valve.

There is also to be fitted to the condenser a 3½-inch copper injection-pipe and valve, for use as a jet-condenser; also, a suitable brass cock for introducing soda to the condenser; a perforated scattering-plate over the tubes, of cast-iron; also to be fitted a small connecting air-pipe and valve from top of condenser to air-pump.

Exhaust-Connections.

The exhaust-connections from the cylinders to the condenser to be so arranged that the two will be independent; the two exhaust-pipes must not be connected to condenser at the same nozzle, but must be so far separated that the exhaust of one engine cannot affect the other.

Steam-Pipe Connections.

The main steam-pipe will be a single copper pipe from the boiler, with a proper slip-joint and a double-poppet throttle-valve, operated by a hand-lever; at the engines there will be branch pipes to each steam-chest, and a poppet-valve, with composition valve-seat, and stem, to each steam-chest—the valves to be so connected as to be worked together or separately.

Air-Pumps.

Air-pumps to be horizontal trunk-plunger pumps, one to each engine, and to be driven by a crank on forward end of main shaft; pumps to be 11 inches diameter and 12 inches stroke; pumps to be lined with composition; piston, trunk, and valve-seats (of grating form), and stems and guards of composition; valves of pure rubber; the chests for foot and delivery-valves to be cast with the pumps, with convenient openings fitted with bonnets for access to the valves; all joint surfaces to be planed; the guide for the trunk to be a slipper-slide, fastened to the bed-plate or pump, or both; the trunk to be fitted with a proper wearing piece or slipper for the guide of the trunk.

Hot-Well.

A suitable cast-iron hot-well with copper rising-pipe, common to both air-pumps, with ventilator-valve at top, to be cast with all necessary openings, nozzles, etc.; all joint surfaces to be planed. The hot-well to be of such form and dimensions as may be directed.

Digitized by Google

Outboard-Delivery Pipe.

A single outboard-delivery pipe, 7 inches diameter, to be of copper, No. 10 wire-gauge; outboard-delivery valve to be a poppet-valve, 7½ inches diameter, with composition valve-seat, and stem, and to be fastened to ship by ¾-inch iron bolts passing through an iron ring on outside of ship.

Circulating Pump.

Circulating pump to be an independent steam-pump, direct-acting, and of approved pattern, equal to at least 11½ inches diameter by 12 inches stroke; pump lined with composition, and to have piston and rod, valve-seats, stems, and guards of composition; steam cylinder to be same diameter as pump; pump valves to be of best India rubber.

The side delivery pipe for the circulating pump to be of copper, No. 12 wire-gauge, with valve at side of ship, fitted in same manner as the side delivery for air-pump.

To the suction pipe of the circulating pump there is to be a branch suction-pipe of lead, 4 inches diameter, with proper shut off and *foot* valves; these valves to be located so as to be readily seen and examined in reference to any leaking through into the bilge; the screw-valve or cock to have an attachment for locking it fast, so it cannot be opened except under the direction of the chief engineer.

Pistons.

Pistons to be of cast iron, double shell, properly ribbed, with cast-iron follower, fastened by wrought-iron bolts, screwed into brass nuts; follower to be accurately turned, and scraped on the rings and piston, and furnished with two eye-bolts, properly fitted for lifting; cast-iron packing rings, in two thicknesses, accurately turned, fitted, and scraped, and set out with approved steel springs.

Piston-Rods

Piston-rods to be of mild steel, 2⅜ inches diameter, accurately turned, and fastened to piston with nut, properly secured.

Feed-Pump.

To one engine there will be fitted a feed-pump, worked off air-pump motion, 4 inches diameter and 12 inches stroke; fitted with composition plunger, valves, and seats; also, to be fitted with a by-pass valve and pipe and air-vessel, so that pump can, at all times, be worked full.

Digitized by Google

Bilge-Pump.

To the other engine will be fitted, in the same manner, the bilge-pump; the valves to be of rubber, seating on composition gratings, with composition guards and stems and air-vessel. There will be *no* by-pass valve to this pump.

Cross-Heads.

Cross-heads to be of wrought iron, well finished, and fastened to piston rod with cross key, or forged solid with rod; journals, 2⅜ inches diameter and 3¼ inches long.

The cross-heads to be guided by slipper slides, of composition, working in the cast-iron guide; the bearing surface of back or bottom of slipper to be not less than 80 square inches; gibs to be so made that they can be readily adjusted and removed without disconnecting the engine, and to be babbited.

Slide Valve Stems.

Slide-valve stems to be of mild steel; those for main valves 1⅝ inches diameter, and cut-off valves 1⅜ inches diameter; stuffing-boxes and glands to be bushed with composition.

Eccentric and Rods.

There are to be two eccentrics, for working each main valve, by a "Stephenson" link, connected thereto by proper rods.

For working the cut-off valves there is to be one eccentric, connected by a proper rod to one end of a link, and the opposite end of the link to be held in position by a proper rod in connection with a *concentric* disk on the crank-shaft; this link to be adjusted by a suitable hand-lever, working in or against an arc; the arc to be marked off to the different points of cutting off. Eccentrics to have a large bearing-surface; straps of composition, well ribbed.

Eccentric-rods of wrought-iron, well fitted and connected to links in such manner that they can be adjusted for wear; links and pins to be case-hardened, and link-blocks of composition.

Connecting-rod.

Connecting-rod of best wrought-iron, forked at the cross-head end and handsomely finished, about 5 feet 11 inches long between centres; crank-end neck 2⅝ inches diameter, and fork-end neck 2⅜ inches diameter. Boxes to be of composition, and suited to cross-head and crank-pin journals, and to be secured by wrought-

Digitized by Google

iron straps with gibs and keys; keys to be secured by steel set-screws; crank-pin boxes to be babbited.

Main Pillow-Blocks.

Main pillow-blocks to be cast with bed-plate, and to be fitted with composition upper boxes and phosphor-bronze lower boxes.

After journal to be 6½ inches diameter and 9 inches in length; forward journal, 5 inches diameter and 8 inches in length; pillow-block caps for after journal to be 2¼ inches thick and 7½ inches in width, and for forward journals 2¼ inches thick and 6½ inches in width; each cap held by two bolts 2⅛ inches diameter; caps to be made to lip or clasp over ends of blocks; boxes to be babbited; bolts and nuts finished, and nuts fitted with proper keepers.

Crank-Shaft.

Crank-shaft to be of wrought-iron, of locomotive form, forged in one piece; after crank-shaft journal to be 6½ inches diameter and 9 inches in length; forward one, 5 inches diameter and 8 inches in length; crank-pin journal, 4¾ inches diameter and 6½ inches in length. Collars on after journal, but none on forward journal.

Line-Shafts.

Line-shafts to be of wrought-iron, in two lengths, smallest diameter 6¼ inches, to be covered with composition through the length of bearing under counter and stuffing box (and with lead in stern pipes), finished ⅜ inch thick, put on hot and properly fastened.

Line-shaft couplings to be plate couplings of cast-iron, accurately turned and fitted, and fastened together by six bolts 1¼ inches diameter, and a steel cross-key or feather.

Coupling of crank-shaft to line-shaft to be a pair of cast-iron wheels or disks, with wrought-iron driving-pins properly fastened in forward or counterbalance wheel, and working free on composition bearing-plates in after wheel.

The thrust-bearing is to be on the forward length of line-shafting, and to be a collar-thrust of approved construction.

The forward end of shafts will be 8 to 10 inches higher from base-line than after end.

Thrust Pillow-Blocks.

Thrust pillow-blocks to be of cast-iron, with composition boxes and phosphor-bronze collar plates, well fitted; an oil-reservoir to be on cap, and the cap and boxes

Digitized by Google

well locked to block to receive the thrust; in addition to the cap and holding down bolts, there will be fore and aft fastening to hull to receive the forward thrust.

Line-Shaft Pillow-Blocks.

Line-shaft pillow-blocks to be of cast-iron, with cast-iron cap, and fitted with composition box for lower half of journal; caps and boxes to be accurately bored and fitted.

Counterbalance Wheel.

There will be a counterbalance wheel of cast-iron, fastened upon after end of crank-shaft, next after crank-journal, which will also form one disk or wheel of the couplings; to be 3 feet 4 inches diameter, or as large as the shape of the vessel will permit, and cast with mortises on the periphery for turning the engine with a pinch-bar.

Screw-Propellers.

Screw-propellers to be of cast-iron, four-bladed, 6 feet 10 inches diameter, 12¼ feet average pitch, and 20 inches in length fore and aft.

Propellers to be bored and keyed upon shafts by a feather key and a cross key; templates of the bore of eyes to be supplied with engines.

A water-tight composition cap to be fitted over the ends of shafts and fastened with composition tap-bolts to after end of hub; also, composition caps over end of cross-keys.

The periphery of blades to be thrown aft, so that the forward side of blades will be 3 inches aft of forward side of hub.

Shaft-Brackets.

To support the after end of shafts there will be placed close to the forward side of propellers a bracket of wrought-iron or of mild steel; section of brackets not less than 1¼ by 6½ inches, the forward and after edges to be thinned or rounded off; the feet of these brackets to be 1½ inches thick, of such width and length as may be necessary for the introduction of the bolts without interference with ship's fastenings; each foot to be fastened by four composition countersunk head-bolts 1⅜ inches diameter, to be through bolts, screwed up on plates on inside of ceiling of ship.

The feet of these brackets to be well rounded off on all edges; the eyes of the brackets to be bored to receive a composition bushing for a journal 7 inches diameter and 10½ inches in length; a composition bushing for journal to be turned and

Digitized by Google

fitted to the eyes of the brackets; bushing to be lined with lignum-vitæ staves, properly fitted, fastened in place and bored.

Bushing to be fastened to brackets with composition tap screws, into forward side of bracket, hubs, and secured from starting.

Lining of Deadwood.

The deadwood, or rather the filling of frames, is to be bored to receive the stern-bearing, then lined with lead ¼ inch thick, carefully and well drawn to fill the opening, flanged over on both ends and nailed with composition nails.

Stern-Bearing.

Stern-bearing to be of composition, and whole length of bearing about 2 feet 8 inches.

The outer end to have a large beveled or warped flange, 1⅛ inches thick, to fit the counter of vessel; and inner end, a loose flange, bearing on the inside of ceiling of ship; the fastening to be eight 1¼ inch yellow metal through-and-through bolts with countersunk heads.

The inner end of the stern-bearings to be projected inboard about 10 inches to receive the end of the stern pipes; stern bearing to be fitted with lignum-vitæ staves the whole length, in the usual manner.

Inboard Stuffing-Boxes.

The inboard stuffing-boxes to be of cast-iron, well fitted and fastened to cross-timber of ship provided for that purpose, and to be at least 12 inches length of shaft-bearing, which bearing is to be lined with lignum-vitæ staves same as the stern-bearing; packing-space for stuffing-boxes 8½ inches deep; gland to be accurately bored and fitted to shaft; packing to screw down on a loose composition ring in bottom of packing-space to keep staves in place.

Stern Pipes and Fittings.

From inboard stuffing-boxes to stern-bearing there will extend, for the covering of shafts, cast-iron pipes of proper diameter, and 1⅛ inches thick in the body; to the forward ends of these pipes the stuffing-boxes are to be properly cast or attached; the after ends of the pipes to be turned with a taper and closely fitted to the forward end of stern-bearings, and held in place by proper bolts.

In fitting these pipes the stern-bearings are to be first fitted and fastened in place, with the interior only rough-bored; after which, with a boring-bar in place, the

Digitized by Google

opening in cross-timber, the socket on forward end of stern-bearings, and the stern-bearings, are all to be bored in line; after which, the stern pipes, with their stuffing boxes, are to be fitted and fastened in place.

Sea-Valves.

There will be screw-valves, having cast-iron chambers, and composition valves, seats, stems, and glands, applied to every opening through vessel for pipes.

One valve for the injection pipe, 4½ inches diameter, and one for steam pump, 3 inches diameter.

Valve for bottom blow, 2½ inches diameter; valve for circulating pump, 6 inches diameter; all fastened with iron bolts or screws.

Valves for injection, for steam pump and for circulating pump, to have each a strainer on outside of vessel, $\frac{3}{16}$ inch thick, of copper, fastened with composition nails or screws.

Note.—The seat of *all* poppet-valves to be secured either by riveting or set screws.

Outboard Delivery.

Outboard air-pump delivery-valve to be a poppet-valve, 7½ inches diameter, with cast-iron chamber and composition valve, stem, and gland, and fitted with handle for tricing up.

Bilge-Valve and Pipe.

Bilge injection-valve to have a cast-iron chamber and composition valve, seat, stem, and gland; valve to be 3 inches diameter, and connected to condenser as near the top as possible; the main portion of the pipe to be of copper, No. 14 wire gauge, and the lower end of lead with a suitable box strainer.

Hoisting-Engine.

There will be a hoisting-engine, furnished by the Light-house Board, about 10½-inch cylinder and 10-inch stroke, which is to be located, erected, and fastened on forward deck, next forward of deck-house, with all pipe connections of wrought-iron; stop-valves of composition; there will be a pan of sheet-lead ⅛ inch thick fitted under the engine to receive all dripping of oil and water.

Boiler.

Boiler to be a return overhead flue boiler, 8 feet 6 inches front and 8 feet 6 inches diameter of waist, and 21½ feet in length, with water-leg furnaces; two furnaces, 6

Digitized by Google

feet 8 inches long; main flues, three of 11 inches, one of 12 inches, and one of 15 inches diameter from each furnace; return flues in two tiers, seven flues of 10½ inches diameter in each tier; flues to be *welded and drawn* flues.

Steam chimney shell, 6 feet 2 inches diameter, and flue, 38 inches diameter; height of steam chimney above shell, 10 feet 6 inches.

Main steam chimney flange, the waist flange, and all longitudinal seams of circular part of boiler, and of shell of steam chimney and lower part of legs, to be double-riveted.

Flat work braced, not exceeding 7½ inches center to center, with ⅞ inch socket-bolts, and other portions braced of corresponding strength.

Circular part of shell, No. 1 wire-gauge; lower part of legs, ⅝ inch thick and double-riveted; shell of steam-chimney, No. 2 wire-gauge; steam-chimney flue of mild steel, $\frac{5}{16}$ inch thick; the fire-box or furnace plates of mild steel, No. 2 wire-gauge.

Flues, Nos. 3 and 4 wire-gauge; heads of shell, flat work, and connection to be No. 2 wire-gauge.

All necessary man- and hand-holes to be cut and fitted with plates, guards, and bolts.

All doors to be double, or to have a plate-lining properly fitted and drilled.

Boiler to be proved by a hydraulic pressure of 65 pounds per square inch, and to stand the same satisfactorily, after which it is to be painted with two coats brown paint.

Fastenings and Supports of Boiler.

The legs of furnace-part of boiler are to rest on cast-iron chairs, set outside the ash-pans, and the waist on one cast-iron saddle properly fastened; the boiler to be fastened by turnbuckle-bolts so as to be perfectly secure when at sea.

Ash-Pans.

Under the furnaces are to be cast-iron ash-pans, made in one width for each furnace, and seated on brick and cement; bottom of pans ⅝ inch thick and flanges ½ inch thick, and properly fitted against the chairs which support the boiler; ash-pans to have a long beveled front flange projecting at least 15 inches from front of boiler, to catch dropping fire and cinders from doors.

Digitized by Google

Grate-Bars.

Grate-bars to be of cast-iron, in two lengths, $\frac{5}{8}$ inch thick on the face and $\frac{5}{16}$ inch thick at lower edge, with $\frac{5}{8}$ inch air-spaces, fitted with all necessary bearing-bars, slicing-bars, etc.

Felting.

Boiler and steam-chimney to be covered with hair-felt 1½ inches thick, with backing of wood-felt or galvanized sheet-iron jacket, as may be directed, all properly secured in place; main and other steam-pipes to be covered with hair-felt 1 inch thick, with backing of canvas, well painted.

Boiler-Attachments.

There is to be attached to the boiler one steam stop-valve, 7 inches diameter; one safety-valve, 6 inches diameter, having composition pins and jaws, with connections to engine-room, and copper escape-pipe 16 feet in length; one lock-up safety-valve as prescribed by law; one bottom blow-valve, 2½ inches diameter; two check-valves, 2½ inches diameter; one surface blow-valve, 2 inches diameter; one screw-stop-valve for steam-pump; one screw-stop valve for circulating pump; and one screw stop-valve for hose connection, fresh-water pipe. All these valves to be of composition, with composition glands and stems. Also, four brass gauge-cocks, with drip-pan and pipe; one glass water-gauge, 15 inches in length; one salinometer cock.

Smoke-Chimney and Casing.

Smoke-chimney to be 42 inches diameter and 24 feet in height, in three lengths of 8 feet each; to be flush-jointed, with bead-iron bands at the butts, 2½ inch angle-iron band at upper end, and band 2½ inches by ⅝ inch at the lower end.

Chimney to be made of iron, No. 14 wire-gauge, and to be fitted with a proper damper, having connections leading to engine-room, for opening and closing.

A casing around lower part of chimney and top of steam-chimney, extending up about 2½ feet from promenade deck, to be made of iron, No. 12 wire-gauge, fastened to deck-combing with angle-iron; also, a neat umbrella above the casing, to permit ventilation.

To be six stays to chimney of wire rope, $\frac{9}{16}$ inch diameter, with proper connections at chimney and deck.

Chimney, casing, and umbrella to be painted with two coats of brown paint, on both sides; also, a third outside coat, of such color as may be directed.

Digitized by Google

Steam-Pump.

One fly-wheel steam-pump, No. 3½, 4 inches internal diameter, to be furnished and fitted with the necessary pipes, cocks, and valves, and arranged to use as a fire-engine, to feed boiler from hot-well, or sea, and to pump from bilge, and fitted with double-exhaust connection to exhaust either into condenser or atmosphere; also, one hundred feet rubber hose, in two lengths, with reel, couplings, and one brass and one leather nozzle-pipe.

All water-pipes for pump to be of copper; steam and exhaust pipes of wrought-iron.

There is to be a brass hose-connection to delivery-pipe at main and upper decks, with shut-off valves.

Ash-Shute.

One short ash-shute, of galvanized sheet-iron, to be furnished and fitted as may be directed for discharging ashes over side of vessel.

Deck-Scuttles.

There are to be furnished and fitted eight cast-iron deck-scuttles, to have close covers and gratings arranged in the usual manner; scuttles to be bored and covers turned.

Ventilators.

There are to be two iron ventilators to fire-room, 16 inches diameter, with bell-mouthed revolving caps, fitted to turned and bored rings; to have arrangements fitted for hoisting ashes, and to be painted with two coats brown paint, inside and outside; also, a third coat outside, of such color as may be directed.

Cast-Iron Flooring, etc.

The whole of the fire-room floor to be covered with cast-iron flooring plates, rough surface, and ½ inch thick in the body, laid upon a course of brick and cement; the deck over fire-room to be covered with cast-iron grating, open for ventilation.

In the engine-room all the space around the engines is to be covered with cast-iron grating; such brass railing around engines to be furnished and fitted as may be required.

There are to be furnished and fitted a wrought-iron ladder, with cast-iron treads, from engine-room to hold, with brass railing; also, one rung-ladder, from deck to fire-room, with iron railing, all properly fitted and fastened.

Digitized by Google

Pipes and Boxes.

All water-pipes for engines and boiler to be of copper, of proper thickness; main steam-pipe, of copper, No. 10 wire-gauge in thickness, and 7 inches diameter, with suitable slip joint; the flanges of all copper pipes to be of composition; all boxes for journals to be of composition.

Steam Heaters or Radiators.

For heating pilot house there will be furnished and fitted a wall coil of brass piping, having not less than 16 feet radiating surface; the steam and drain-pipes from this coil must be of brass or copper for at least 8 feet distance from the pilot-house.

For inspector's cabin there will be pedestal radiators of not less than 56 feet surface; for forward cabin below, a pedestal radiator of not less than 56 feet surface; and for the forecastle a radiator having not less than 36 feet radiating surface; all to be fitted with necessary steam and drain-pipes and valves.

A steam-pipe and valve must be arranged for heating water in the bath room.

Water-Tanks.

There will be furnished and fitted two wrought-iron water-tanks, to contain not less than 250 gallons each, to be made of iron, No. 6 wire-gauge, with necessary man holes and plates; they are to be connected together by a wrought-iron pipe, 1½ inches diameter, with stop-valves and the necessary air-pipes.

There will also be a pipe from the deck to this connecting-pipe with a suitable composition deck-screw at deck; also, a ¾ inch stop cock near the bottom of each tank for draining, and a pipe from the connecting-pipe to the hand-pump in the kitchen for drawing water from the tanks.

Oil, Waste, and Tallow-Tanks.

There will be furnished, fitted, and fastened in place, as may be directed, one iron oil-tank with lock-cock, to contain thirty gallons; also, one portable oil-tank, of copper, to contain ten gallons, with cover, cock, and drip pan; one sheet iron waste-tank to contain fifty pounds, and one sheet-iron tank to contain one hundred pounds tallow; all to be located as may be directed.

Steam-Whistle.

There is to be furnished and fitted one brass steam-whistle, 6 inches diameter of bell, with stop-valve at the boiler and wrought-iron steam-pipes; all necessary arrangements to be fitted for blowing it from the pilot-house.

Digitized by Google

Gong, Bell, and Speaking-Tube.

Engine-room to be furnished with one gong, 12 inches diameter, with brass shield, and tube to return sound to the pilot-house; also, two gongs, of 8 inches diameter, and one "jingle" bell, all arranged with proper wires and pulls for ringing from the pilot-house; also, a brass speaking-tube from pilot-house to engine-room.

Salinometer.

To be furnished and fitted one salinometer, with all necessary pipes, valves, hydrometers, and thermometers.

Gauges.

Engine-room to be furnished and fitted with one 6½ inch nickel-plated brass case steam-gauge, two similar vacuum gauges, and one counter and marine clock combined, with all their connections and attachments; pipes to be of copper.

For fire-room, one 6½ inch iron case steam-gauge, and one piece 1¼ inch rubber hose about 18 feet in length, with proper stop cock, for wetting down ashes.

Hoisting Ashes.

For hoisting ashes there are to be furnished two suitable sheet-iron ash-buckets, and to be arranged and fitted with the necessary eye-bolts and blocks and falls in the fire-room ventilators.

Oil-Cups and Water-Pipes.

There are to be brass oil-cups, automatic or plain, as may be directed, fitted to all journals; also, one piece of rubber hose, 1¼ inches diameter, fitted with valve and pipe, for supplying water to any of the journals which may require it.

Painting.

All the work not finished or polished to have three coats of lead or zinc paint, the last coat such color as may be directed, and to be covered with a good coat of clear white varnish.

Duplicate Pieces.

There are to be furnished and fitted in place: One pair crank-pin boxes; three follower-bolts and nuts for piston; three cylinder-head bolts; one cross-head gib; one hundred extra tubes for condenser; two hundred and fifty packings for condenser-tubes; one complete set of rubber valves for one air-pump; one complete set rubber valves for circulating-pump; one complete set rubber valves for bilge-pump; one feed-pump valve and seat; twelve extra grate-bars; three water-gauge glasses;

Digitized by Google

twenty-four $\frac{5}{8}$ inch joint bolts and washers; one man- and one hand-hole plate complete.

Tools.

There are to be furnished: One complete set fire-room tools; one complete set S wrenches for engines; one key-wrench; three screw-wrenches; two pipe-wrenches; two copper oil-measures; one complete set brass oil-cans with drip-pan; one 6 inch vise and bench; two pairs iron blocks and falls; two hand-hammers; one sledge; one copper hammer; one drill-crab; one pall-wrench and drill-brace, with six drills fitted; one pair calipers; one hack-saw; three chipping-chisels; two cape-chisels; two calking-tools; one pinch-bar; one dozen files assorted, with one-half dozen handles; one set flue-brushes and handle; three boiler-scaling tools; one center-punch; one set stocks, taps, and dies, to suit thread of engine-bolts; one socket-wrench for piston-followers; one chest carpenter's tools complete.

REMARKS.—During his long and varied experience, extending over forty years, Mr. Copeland has designed some of the most successful engines, both for the Navy and the Merchant Marine, notably the engines of the U. S. steam frigates "Mississippi," and "Missouri" in 1840–41, of the "Susquehanna" and "Saranac" in 1849, and of the celebrated mail steamers of the Collins Line in 1850, and other ocean and river steamers too numerous to mention, both simple and compound.

Digitized by Google

Digitized by Google

High Pressure
Surface Condensing Engine.
for
U.S. Revenue Steamer "Corwin".
Designed by
Chas. E. Emery Esq.
N.Y.

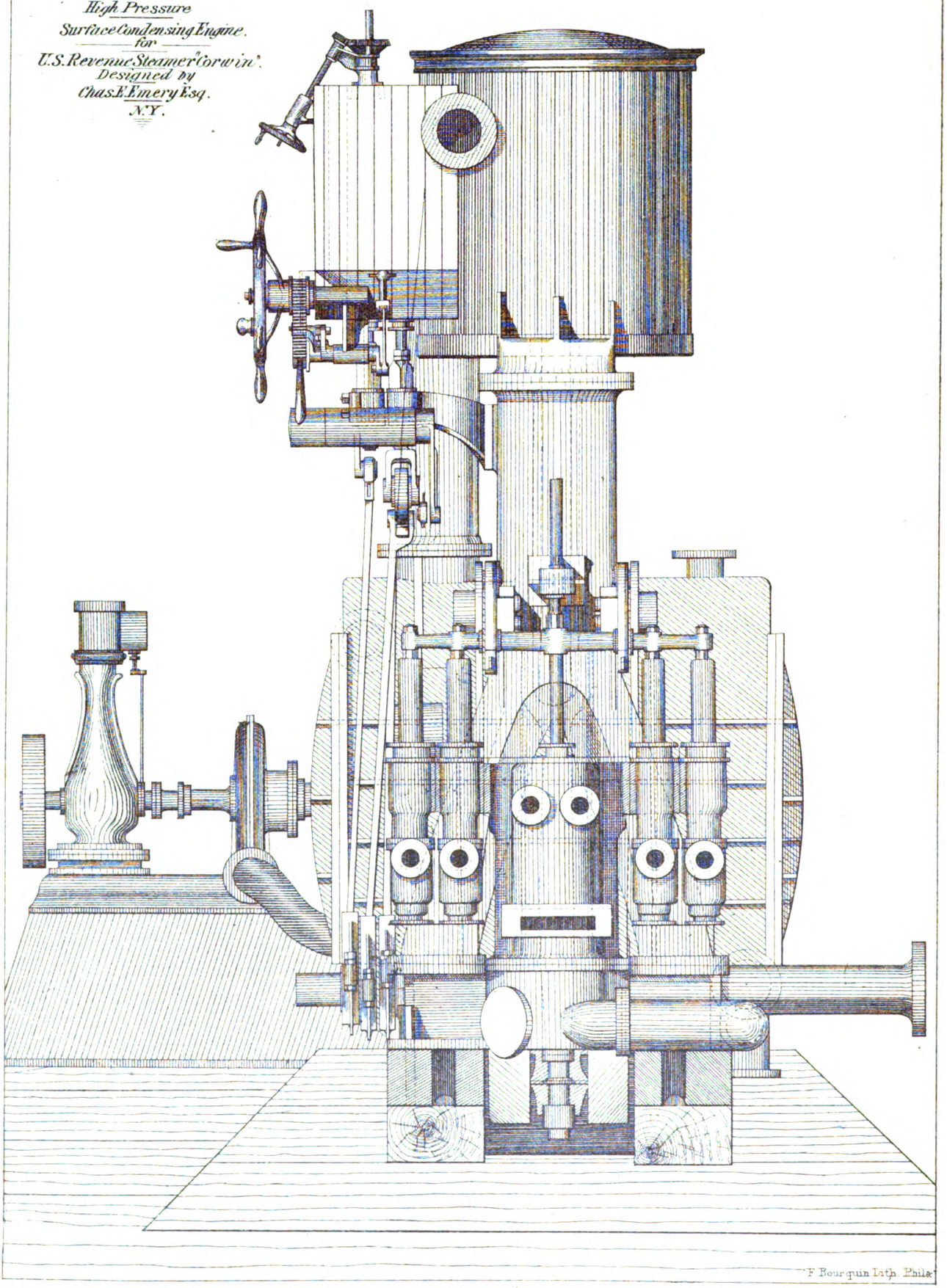

F. Bourquin Lith. Phila.

UNIV. OF MICH.

Digitized by Google

Digitized by Google

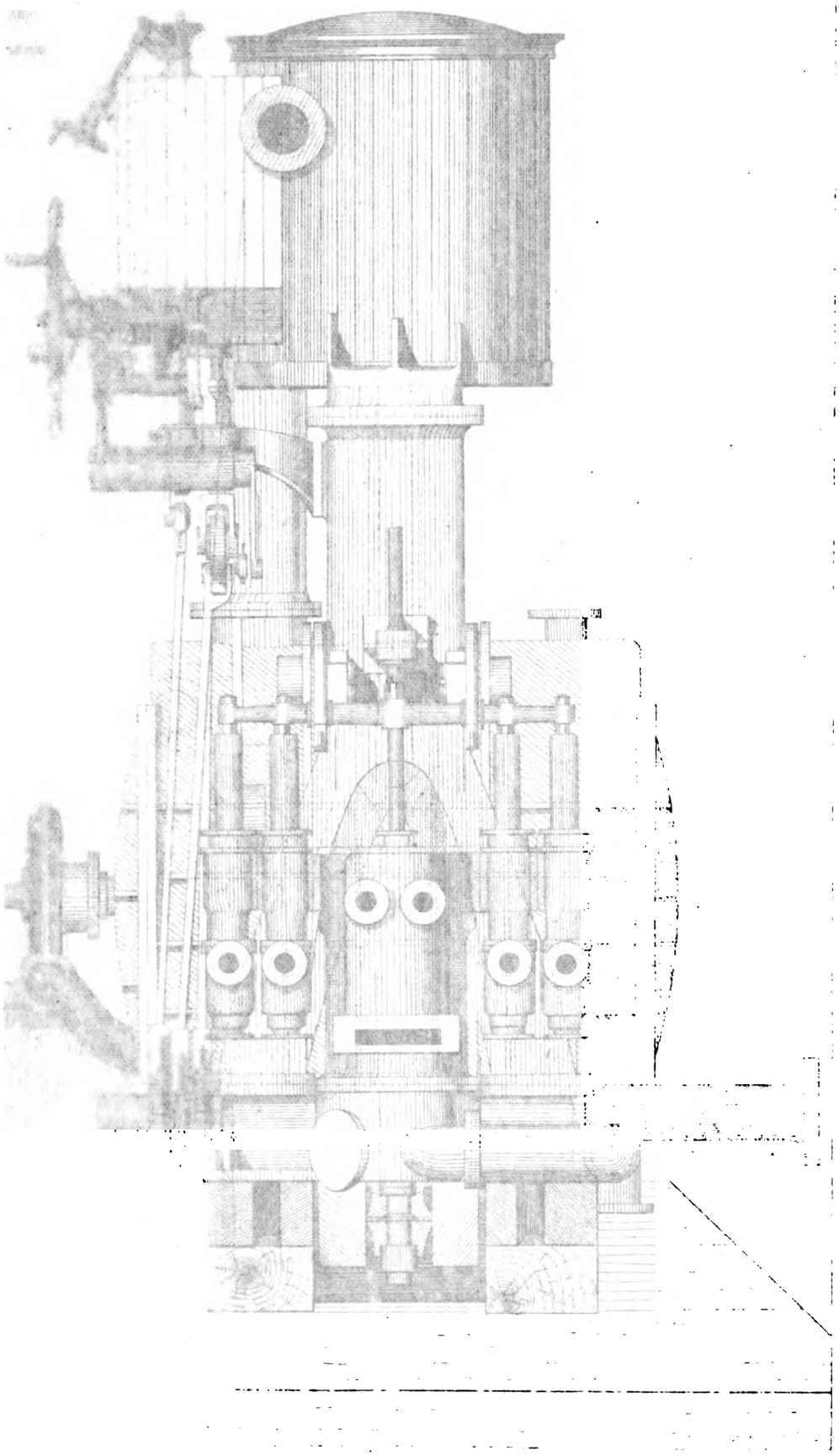

Digitized by Google

CHAPTER IX.

HIGH PRESSURE CONDENSING ENGINE OF THE UNITED STATES REVENUE STEAMER "CORWIN."

Plate VI. represents the engine of the United States revenue steamer "Corwin," designed by Chas. E. Emery, Consulting Engineer, of New York. The cylinder is 34 inches in diameter with 34 inches stroke of piston; it is provided with a steam-jacket, and designed to run with a steam pressure of from 60 to 80 pounds per square inch. The cylinder sits on two frames of rectangular section; one of which is cast on the surface condenser, and the other is securely attached to the bed-plate, thus securing the stability of the four column system, with the accessibility due to a single column on each side. To trim the ship the condenser is placed on one side, and the air-pump on the other, the two being connected by a pipe, independent of the bed-plate, which can be readily cleaned or renewed when corroded or worn out. The connection to the delivery-pipe is carried in the casting down the exterior of the air-pump, so that the pipe lies closely against the side of the vessel, thus giving ample head room.

The throttle valve is a gridiron slide; and the link is shifted by the pinion and quadrant with the lever shown, and to prevent lost motion the quadrant is clamped laterally between collars on the pinion shaft, set up by an external nut operated by a swinging arm, with which a blow may be struck against a lug on the nut, so as to tighten up or loosen it instantly. The cut-off valve consists of the usual two plates on the back of the main valve drawn together or pushed apart by a right and left-handed screw, which is operated by the bevel gear as shown. The surface condenser contains 960 feet of condensing surface. The circulating-pump is one of the centrifugal kind, driven by a small independent engine. Altogether, this engine is excellently designed to secure strength, accessibility, durability, and economical working, and is also tasty in appearance.

Mr. Emery has also designed some very successful compound engines for other Revenue vessels and merchant steamers, and the writer regrets that his limited space prevents him giving other examples of that talented engineer's work, which are indeed fine specimens of modern American marine engines.

Digitized by Google

CHAPTER X.

COMPOUND ENGINES AND BOILERS OF THE UNITED STATES IRON-CLAD "MIANTONOMOH," DESIGNED AND CONSTRUCTED BY THE MORGAN IRON WORKS, NEW YORK.

The Miantonomoh is an iron clad war ship belonging to the United States Navy, and is of the following dimensions:

Length between perpendiculars	250′ 0″
Length on water line	259′ 0″
Length over all	262′ 0
Breadth of beam back of armor	50′ 0
Breadth of beam over armor	55′ 2″
Depth of hold	14′ 0″
Tonnage	3.825

It was originally contemplated to have fitted to the vessel two pair of horizontal direct back-action engines of the same pattern of those used in the 800 horse-power sloops of the *Alliance* class, and so was the original contract entered upon.

Subsequently, as recommended by a board of officers, these plans were substituted by the adoption of an improved arrangement of twin screw-engines so arranged that they could be placed in a smaller space. This design, which as shown in Plate VII., was made the subject of a patent numbered 171,074, and issued on December 14, 1875.

The engines were constructed in New York, at the Morgan Iron Works, and shipped to Chester, Pa., where the boilers were built and the whole erected on board of the vessel.

General Description of Engines.

The engines are of the twin screw direct-acting compound type. The cylinders of one engine are placed opposite and inclined to those of the other engine, with the high-pressure cylinder of one opposite the low-pressure cylinder of the other. The cylinders rest upon brackets springing from the crank-shaft pillow-block frames, which are supported upon the condensers, the condensers forming the base of the engines.

Each cylinder is made a shell or casing inclosing a receiver to which the valve-

Digitized by Google

Digitized by Google

Digitized by Google

Twin Screw Compound Engines
for the
U.S. Iron Clad "Miantonomoh"

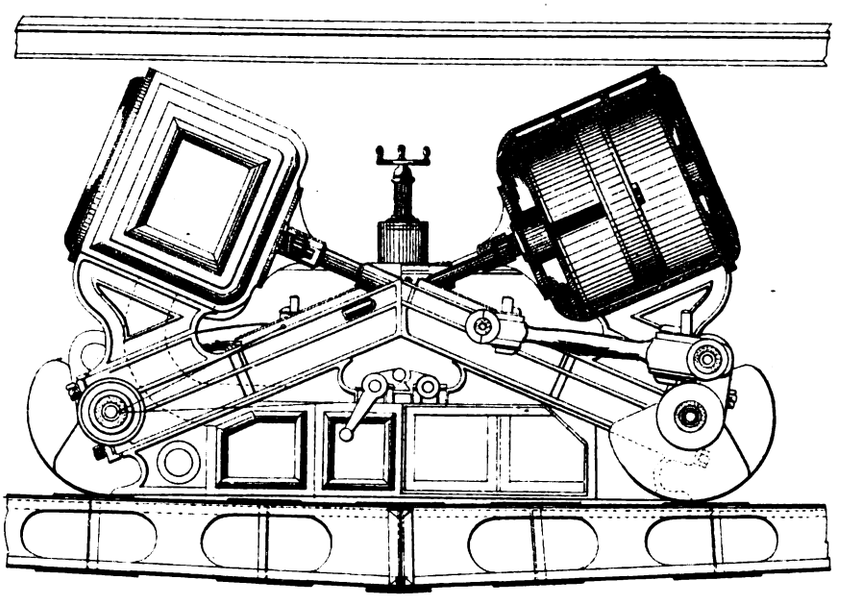

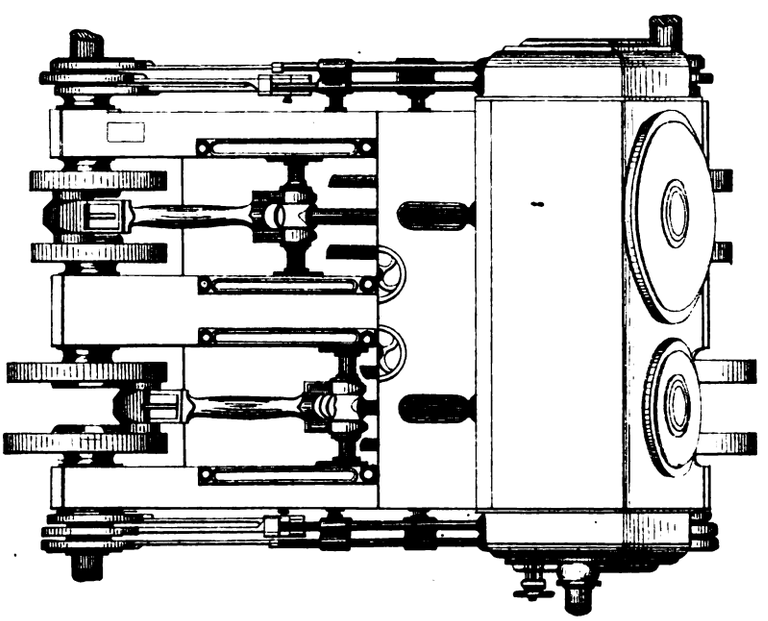

F. Bourquin, Lith. Phila.

Digitized by Google

Digitized by Google

chests are attached. Each cylinder also forms a steam-jacket which surrounds an inner wearing cylinder, which is cast separately and firmly bolted in place.

Each valve-chest incloses a main slide and cut-off valve; the main valves are worked by means of eccentrics and Stephenson's links, coupled directly with the valve-stems.

The cut-off valves are operated by separate eccentrics connected directly with the stems, and so fitted that they can be adjusted, while the engines are in motion, to cut off between the limits of $\frac{1}{8}$ and $\frac{5}{8}$ of the stroke of the piston. All the cylinders are fitted with relief and pass-over valves operated by means of levers in the engine-room. The pistons of the high-pressure cylinders have one piston-rod, the pistons of the low-pressure cylinders have two rods. The piston-rods are attached to the cross-heads, which run on guides made on the pillow-block frames.

The connecting rods are fitted with straps, gibs, and keys, and coupled each by a forked end to the cross-heads. The crank shafts are placed 9 feet each side of the center line of ship; each shaft is made with two cranks at right angles to each other, and are of the built-up type with suitable counter-balances for the engines; each shaft is mounted on three journals and united to the line shafting by disengaging coupling.

The steam is exhausted into the condensers through passages made in the brackets and pillow-block frames. The condenser tubes are placed fore and aft; the refrigerating water circulating through one-half of the tubes, and returning through the others to the forward end of the condenser, thence discharging through the outboard delivery-valve; the tubes are packed with Lighthall's paper packing.

The reversing cylinders are placed on the engine gallery above the condensers and between the cylinders, and set upon rock shafts which connect with their respective links.

The air and circulating pumps are worked independently of the main engines and each other, and are placed forward of the engines, the circulating pumps on the port side and the air-pump on the starboard side of the ship.

The circulating pumps are two in number, and are centrifugal in their action, being operated by a pair of upright overhead-cylinders, and so arranged that either or both pumps can be used at will. It is intended that they shall also be used as bilge-pumps, and the necessary valves have been provided, but are not yet permanently located, awaiting the completion of additional water-tight bulkhead in process of erection between the engine and fire-rooms.

Digitized by Google

The air-pump is vertical and double-acting, and operated by a steam-cylinder immediately above it. The additional cylinder was a matter of after consideration, and was fitted in order to insure the prompt starting of the engine and to equalize its motion when in operation.

Connected with this pump and upon the same cross-head are two single-acting feed-pumps inclosed in the air-pump chest.

Attached to these pumps is a Selden's water purifier or filterer, and the entire feed-pump supply passes through this apparatus before entering the boilers.

In addition to these feed-pumps there are two horizontal steam-pumps of the Blake pattern for boiler-feeding only, having water-pistons of 6 inches diameter and a stroke of 12 inches; they are placed in the forward end of the fire-room.

Two other steam-pumps of similar pattern, but with 7-inch water-cylinders and 12-inch stroke, are located in the after part of engine-room, and in addition to the usual attachments for feed, fire, and bilge-pumping, are arranged for circulating water through the auxiliary condenser.

The following are the dimensions of the principal parts of the engines:

Diameter of high-pressure cylinders, 32 inches.

Diameter of low-pressure cylinders, 48 inches.

Length of stroke, 42 inches.

Diameter of piston-rods (low-pressure), 4⅛ inches.

Diameter of piston rod (high-pressure), 5 inches.

Displacement of high-pressure piston per stroke, 19.309.

Displacement of low-pressure piston per stroke, 43.657.

Effective ratio of cylinders, 1 to 2.261.

Capacity of receiver, 83.906 cubic feet.

Capacity of low-pressure steam-chest, 16.524.

Capacity of receiver, including low-pressure steam-chest, 100.43 cubic feet.

Ratio of low-pressure cylinder to receiver, 1 to 1.922.

Ratio of low-pressure cylinder to receiver, including low-pressure steam-chest, 1 to 2.300.

Clearance inboard end, ⅝ inch.

Clearance outboard end, ⅜ inch.

Total mean clearance in length at one end of high-pressure cylinder, 3.458 inches of stroke.

Digitized by Google

Total mean clearance in length at one end of low-pressure cylinder, 2.649 inches of stroke.

Area of steam-ports of high-pressure cylinder, 72 inches.

Area of exhaust-port high-pressure cylinder, 72 inches.

Area of steam-ports of low-pressure cylinder, 114 inches.

Area of exhaust-ports of low-pressure cylinders, 152 inches.

Area of exhaust-ports to condenser, 126 inches.

Travel of valve of high-pressure cylinder, 5½ inches.

Travel of valve of low-pressure cylinder, 5½ inches.

Diameter of main valve-stem (steel), 2½ inches.

Diameter of cut-off valve-stem (steel), 2 inches.

Diameter of crosshead-journal, 5½ inches.

Length of crosshead-journal, 5 inches.

Length of connecting-rod between centres, 84 inches.

Diameter of neck, crank-pin end, 5 inches.

Diameter of cross-head end, 5 inches.

Diameter at center, 6½ inches.

Diameter of crank-shaft, 10¼ inches.

Length of crank-shaft, 14 feet 6 inches.

Diameter of crank-pin journals, 9⅝ inches.

Length of crank-pin journals, 15 inches.

Thickness of web of cranks, 5½ inches.

Number of main journals to each crank-shaft, 3.

Diameter of main journals, 10¼ inches.

Length of main journals (outboard), 17½ inches.

Ratio of length to diameter of crank-pin journal, 1 to 1.55.

Ratio of length to diameter of crank-shaft journal (outboard), 1 to 1.7.

Length of main journals (center), 27 inches.

Ratio of length to diameter of crank-shaft journal (center), 1 to 2.63.

Diameter of line-shafting, 9¾ inches.

Diameter of line-shaft journals, 10 inches.

Length of line-shaft journals, 22 inches.

Ratio of length to diameter of line-shaft journal, 1 to 2.2.

Length of thrust section-line shafting, 20 feet.

Digitized by Google

Intermediate section of line shafting, 21 feet.
Length of propeller-shaft, 43 feet.
Length of thrust-bearing, 23¾ inches.
Diameter of thrust-collars (inside), 10 inches.
Diameter of thrust-collars (outside), 14 inches.
Number of thrust-collars, 11.
Area of thrust-collars, 829.378 square inches.
Diameter of propeller-shaft (including composition casing), 10¾ inches.
Length of lignum-vitæ bearing inboard end of stern-pipe, 24 inches.
Length of lignum-vitæ bearing outboard end of stern-pipe, 24 inches.
Length of lignum-vitæ of hanging bearing, 54 inches.
Length of crosshead-gibs, 8 inches.
Breadth of crosshead-gibs, 6 inches.
Area of one gib, 48 square inches.
Diameter of air-pump, 24 inches.
Length of stroke, 26 inches.
Area of foot-valves, 225.19 square inches.
Area of delivery-valves, 154 square inches.
Area of receiving vapor-valves, 51.924 square inches.
Area of delivering vapor-valves, 51.924 square inches.
Diameter of air-pump rod, 3 inches.
Diameter of steam-cylinder to work air-pump, 20 inches.
Length of stroke, 26 inches.
Diameter of piston-rods, 2 inches.
Number of piston-rods, 2.
Capacity of circulating-pumps, 2,800 gallons each per minute.
Diameter of discharge-pipe of circulating-pumps, 14 inches.
Diameter of steam-cylinders to work circulating-pumps, 11 inches.
Length of stroke, 9 inches.
Length of condenser-tubes (exposed), 8 feet 6½ inches.
Diameter of condenser-tubes (outside), ⅝ inch.
Number of condenser-tubes, 3,024.
Area of condensing surface, 4,225.19 square feet.
Diameter (outside) of main steam-pipe, 12¼ inches.

Digitized by Google

Digitized by Google

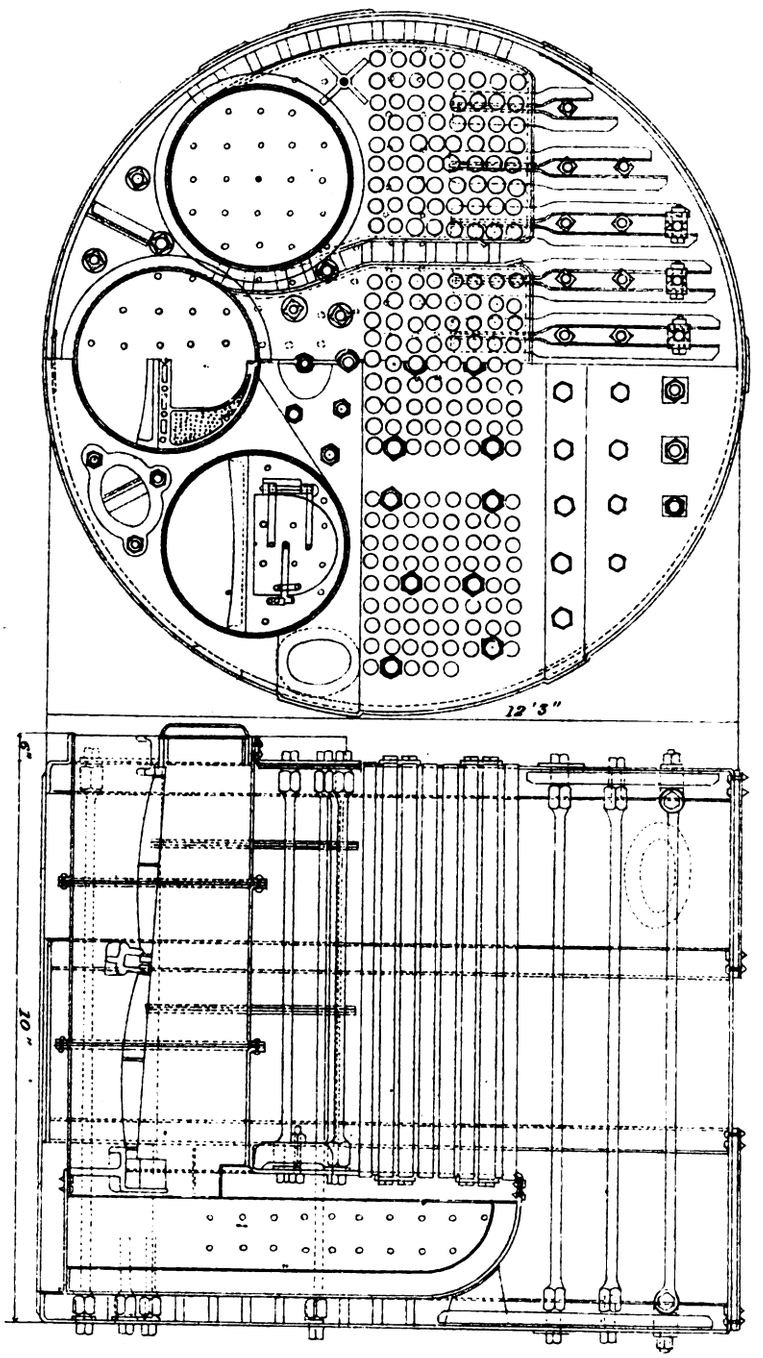

Boiler U.S. Iron Clad
Miantonomoh.

F. Bourquin Lith. Phila.

Digitized by Google

Digitized by Google

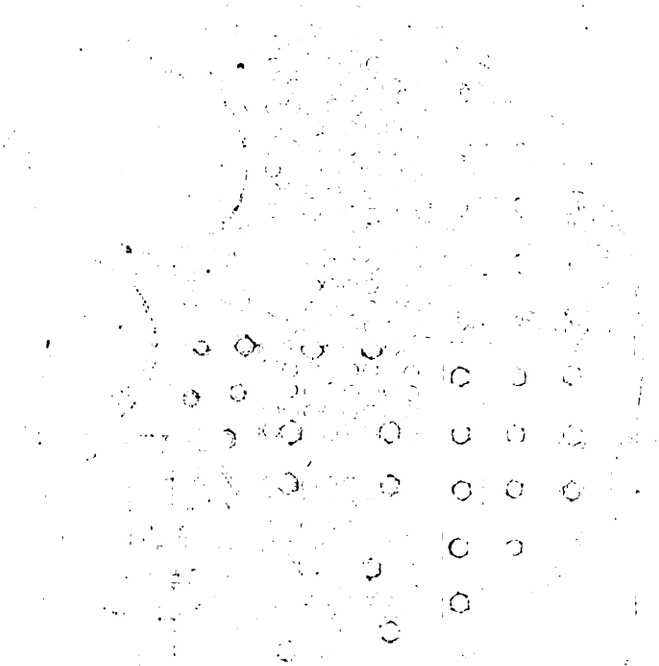

Digitized by Google

Screw Propeller
for
U.S Iron Clad Steamer
Miantonomoh.

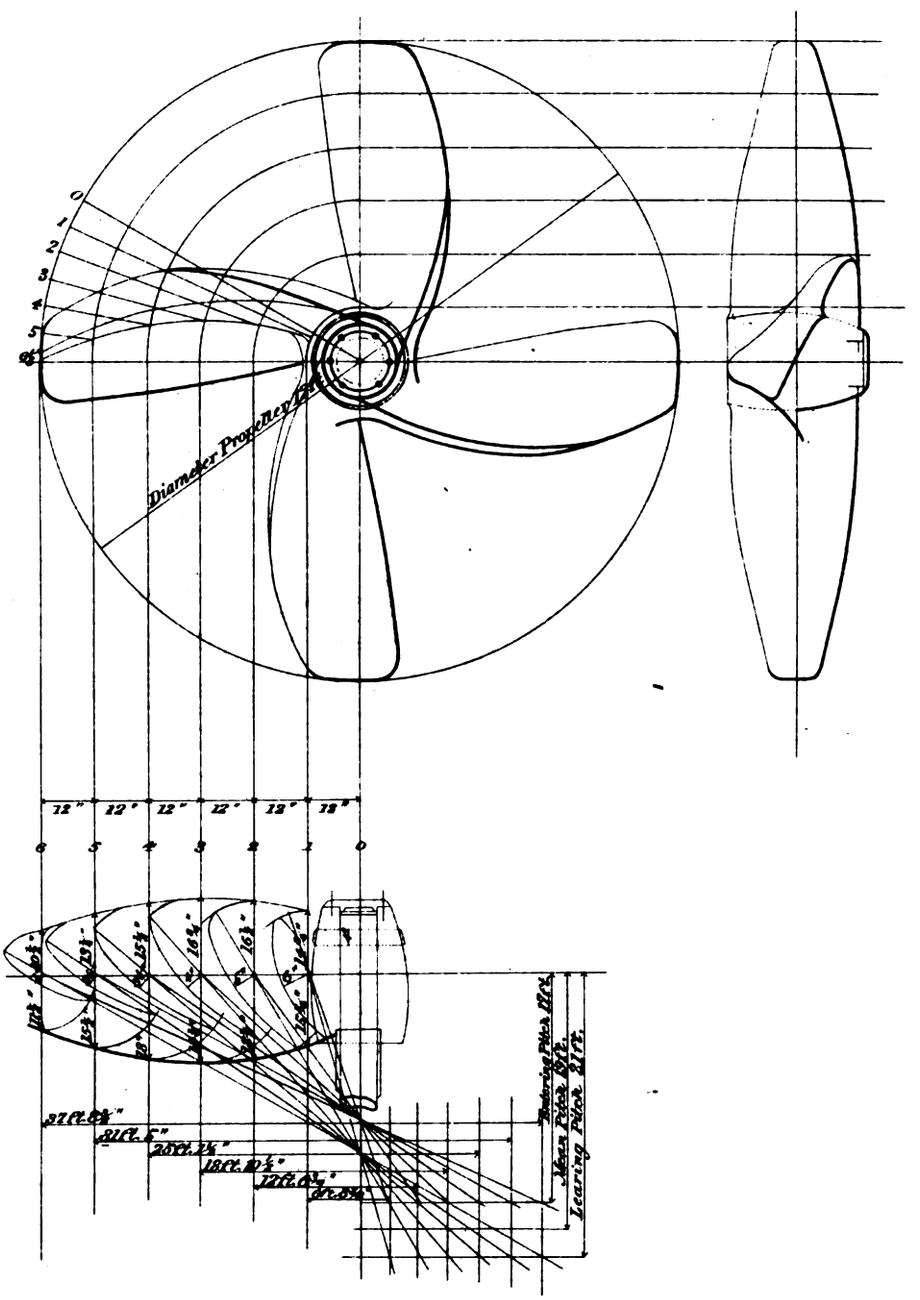

Digitized by Google

Diameter of each propeller, 12 feet.
Initial pitch, 17 feet.
Mean pitch, 19 feet.
Terminal pitch, 21 feet.
Number of blades, 4.
Length of blades (maximum) in direction of axis, 29 inches.
Length of blades (minimum) in direction of axis, 9.75 inches.
Length of blades at hub in direction of axis, 21.87 inches.
Surface of blades, 54.976 square feet.
Length of hub, 30 inches.
Diameter of forward end, 19 inches.
Diameter of after end, 15 inches.
Diameter at greatest part, 21 inches.
Distance between engine-room bulkheads fore and aft, 26 feet 6 inches.
Breadth athwartships at base of engines, 29 feet.
Breadth athwartships under main-deck, 22 feet 3 inches.
Space occupied by the engines over steam-chests, fore and aft, 14 feet.
Space occupied by the engines over steam-chests athwartship, 20 feet 5 inches.
Distance between centres of the two crank-shafts, 18 feet.
Total height of engines above bed, 12 feet 1¾ inches.
Height of bed above inner (bottom) plating, 11 inches.
Height of engines above inner plating, 12 feet 11 inches.
Height of main steam-pipe above inner plating, 12 feet 11¼ inches.
Height of crank-shaft centre above bed, 30 inches.
Distance between centre line of high and low pressure cylinders, 5 feet.

General Description of Boilers.

The boilers, six in number, are all of the same dimensions and placed forward of the engines, three on each side of the vessel, with the fire-room between them. They are so arranged that any one or more can be used in connection with either pair of the main engines. The two after boilers are connected so as to be used singly or collectively as auxiliary boilers for operating the blowers, pumps, etc. Each boiler rests on and is firmly secured by means of suitable straps to two wrought-iron saddles (one at each end of the boiler) which are securely fastened to the ship. The edges of the saddle-plates of the boilers abut upon each other, and

Digitized by Google

are secured together by means of double butt-straps, thus forming a continuous support along the front and back of the three boilers on a side.

The uptakes projecting beyond the front heads connect all the boilers on a side, and both uptakes (at their centre fore-and-aft line) discharge their products of combustion into one smoke-pipe, situated in a vertical line over the keel. The floor-plates in fire-room and about passage-ways are all of indented wrought-iron plates.

Each boiler is fitted with a sheet-brass dry pipe, and with an independent safety stop, feed, surface, and bottom blow-valve, with suitable connection-pipes to each, and all necessary gauges, etc. All valves connected with the boilers are of composition.

All seams not in contact with the fire are double-riveted, the sheets planed on the edges, butt-jointed and covered with a butt-strap the same thickness as the sheet, with the exception of the transverse seams of the shell, which are lapped.

The heads of each boiler are thoroughly braced by means of rods and stay plates, the flat parts about the back connections, etc., by socket bolts placed at regular distances apart.

There are two cylindrical steam-drums on each side of the vessel, placed horizontally in the spandrels over the boilers, and parallel to their axes. The outboard ends of drums are each connected by means of a pipe with the boiler stop-valves, and the inboard ends to a superheating pipe situated in and running from aft forward along the uptakes, thus making a steam connection to all the boilers on one side. The superheating pipe returns again parallel to itself, along the uptake, and connects to the main steam-pipe.

Dimensions of Boilers.

Diameter (outside), 12 feet 4½ inches.

Diameter (inside), 12 feet 3 inches.

Length outside (exclusive of furnace doors, which project 6 inches from the front-head), 9 feet 10¾ inches.

Number of furnaces in each boiler, 3.

Diameter (internal) of furnaces, 38 inches.

Length of furnace, 7 feet 3 inches.

Height of center of middle furnace, above tangent, to lowest point of shell, 2 feet 1 inch.

Height of center of side furnace, above tangent, to lowest point of shell, 3 feet 8 inches.

Digitized by Google

Distance from center of boiler to center of furnaces, 4 feet 1 inch.
Distance from center of middle furnace to center of side furnace, 3 feet 7½ inches.
Thickness of shell, ¾ inch.
Thickness of heads and tube-sheets, ⅝ inch.
Thickness of crown-sheet, ½ inch.
Thickness of back connections, ⅝ inch.
Number of drawn brass tubes to middle furnace, 72.
Number of drawn brass tubes to each side furnace, 69.
Total number of tubes in one boiler, 210.
Length of tubes, 7 feet 3 inches.
Diameter (outside) of tubes, 3 inches.
Diameter (inside) of tubes, 2.782 inches.
Distance between centers of tubes, horizontally, 4⅜ inches.
Distance between centers of tubes, vertically, 4¼ inches.
Number of head braces, 37.
Diameter of head braces, 1⅞ inches.
Distance between centers of braces, 12 inches.
Depth of back connections, including thickness of metal, 27 inches.
Diameter of socket-bolts, 1 inch.
Distance between centers of socket-bolts, 7 inches.
Diameter of safety-valve to each boiler and superheating pipe, 6 inches.
Diameter of each stop-valve to each boiler, 6½ inches.
Diameter of check-valve to each boiler, 2½ inches.
Diameter of bottom blow-valve to each boiler, 2½ inches.
Diameter of surface-blow to each boiler, 2 inches.
Diameter of feed and bottom blow-pipes, 3½ inches.
Diameter of surface blow-pipes, 2 inches.
Diameter of each steam-drum, 36 inches.
Length of each steam-drum, 8 feet 6 inches.
Thickness of shell of steam-drums, ⅜ inch.
Thickness of heads of steam-drums, ½ inch.
Length of grate, 6 feet 6 inches.
Width of grate, 3 feet 2 inches.
Mean height of crown-sheet above grate, 20½ inches.

Digitized by Google

Area of grate in one furnace, 20.5 square feet.
Area of grate in one boiler, 61.5 square feet.
Area through tubes for draught, side furnace, 2.846 square feet.
Area through tubes for draught, middle furnace, 2.97 square feet.
Total area through tubes in one boiler, 8.662 square feet.
Ratio of the grate surface to calorimeter through the tubes, 1 to .1408.
Heating surface in crown sheets of one boiler, 106.944 square feet.
Heating surface of back connections of one boiler, 167.211 square feet.
Heating surface of front connections of one boiler, 57.333 square feet.
Heating surface in tubes of one boiler, 1,132.029 square feet.
Total heating surface in one boiler, 1,463.517 square feet.
Area through back connection of center furnace, 5.055 square feet.
Area through back connection of wing furnaces, 14.444 square feet.
Total area through back connections of one boiler, 19.5 square feet.
Ratio of the grate to the heating surface, 1 to 23.79.
Diameter of smoke-pipe, 8 feet 3 inches.
Area of smoke-pipe, 53.456 square feet.
Area of openings through grating of smoke-pipe, 45.2 square feet.
Diameter (internal) of armored smoke-pipe above grating, 10 feet 1 inch.
Diameter (internal) of armored smoke-pipe below grating, 9 feet 9 inches.
Total height of smoke-pipe above grate, 50 feet.
Thickness of armor smoke-pipe above grating, 8 inches.
Thickness of armor smoke-pipe below grating, 10 inches.
Height of armor smoke-pipe above deck, 6 feet.
Ratio of grate surface to area through smoke-pipe, 1 to .14485.
Ratio of grate surface to area through smoke-pipe grating, 1 to .1225.
Ratio of grate surface to area through back connections, 1 to .31707.
Superheating surface of each of the end boilers, 14.171 square feet.
Superheating surface of the intermediate boiler, 25.842 square feet.
Superheating surface of two pipes, 15¾ inches in diameter and 49.5 feet long, with connections to drums, 210.458 square feet.
Total superheating surface of the three boilers on one side, 264.64 square feet.
Weight of sea-water in one boiler, 6 inches above tubes, 32,752 pounds.
Weight of sea-water in tons of 2,240 pounds each in one boiler, 6 inches above tubes, 14.621 tons.

Digitized by Google

Steam room in one boiler, 244.069 cubic feet.

Steam room in one steam-drum, 55.893 cubic feet.

Steam room in superheating pipes and connections to drums on one side, 60.905 cubic feet.

Steam room in main steam-pipe (one side), 27.641 cubic feet.

Total steam room in boilers, drums, superheating and steam-pipes on one side, 941.539 cubic feet.

Ratio of displacement of high-pressure pistons to total steam room, 1 to 48.658.

Distance between fire-room bulkheads, lengthwise (mean), 41 feet.

Distance between fire-room bulkheads, athwartships, 35 feet.

Space occupied by the boilers, lengthwise, 40 feet.

Width of fire-room at floor, 11 feet.

Width of fire-room at furnaces, 10 feet 1 inch.

Height of highest part of boiler-shell above inner plating of ship, 13 feet 5 inches.

Height of highest part of steam-drums above inner plating of ship, 13 feet 6 inches.

Space between boilers, 9 inches.

Space between forward boiler and fire-room bulkhead, 9½ inches.

Space between after boiler and fire-room bulkhead, 14⅞ inches.

Weight of sea-water in all boilers, 6 inches above tubes, 196,512 pounds.

Capacity of coal-bunkers in cubic feet, 14,102.

Capacity of coal-bunkers in tons of 42.5 cubic feet each, 331.8.

Number of days' coal at full steaming, 5.98.

Number of days' coal at 10 knots, 10.37.

Digitized by Google

CHAPTER XI.

COMPOUND ENGINES AND BOILERS OF THE PACIFIC MAIL STEAMSHIP COMPANY'S STEAMERS "CITY OF PEKING" AND "CITY OF TOKIO." DESIGNED BY THOMAS MAIN, CONSULTING ENGINEER, NEW YORK. CONSTRUCTED BY JOHN ROACH & SON. 1874.

The Pacific Mail Steamships "City of Peking" and "City of Tokio" (See Plates X. and XI.) were built at Chester, Pa., and are 423 feet long over all, by 47 feet 10 inches beam and 38 feet 6 inches depth of hold. These ships have four masts, two smoke pipes, and straight stems.

The engines consist of two pairs of vertical compound engines 51 and 88 inches diameter of cylinders, and 4 feet 6 inches stroke; each pair is connected at right angles, one pair is placed forward of the other in the vessel; and they are connected to four pairs of cranks on the propeller shaft. The forward cranks are placed on the shaft opposite to the after ones, so that the working parts of the one pair of engines will balance those of the others. The engines are supplied with steam from ten cylindrical tubular boilers, constructed to carry 60 lbs. pressure above the atmosphere.

For each pair of engines, there are one surface-condenser, two air-pumps, two feed-pumps, two bilge-pumps, and one independent circulating-pump, so that each pair may be used separately if desired, or both together, for driving one screw-propeller 20 feet 3 inches diameter by 29 feet mean pitch.

The high-pressure cylinders are 51 inches diameter by 4 feet 6 inches stroke, the linings are cast separate, of hard cast-iron, and bolted by a flange at the bottom, and packed at the top end; the steam jacket surrounds the lining, and the receiver is outside of the steam-jacket; the steam-ports are arranged for double-ported valves, the steam-chests and brackets to bolt to the frames are cast on. The low-pressure cylinders are 88 inches diameter by 4 feet 6 inches stroke, the steam-jackets are cast around the sides and bottoms of the cylinders, and the flanges and brackets for bolting to the high-pressure cylinders, and columns are cast on; the cylinders are all

Digitized by Google

Digitized by Google

Digitized by Google

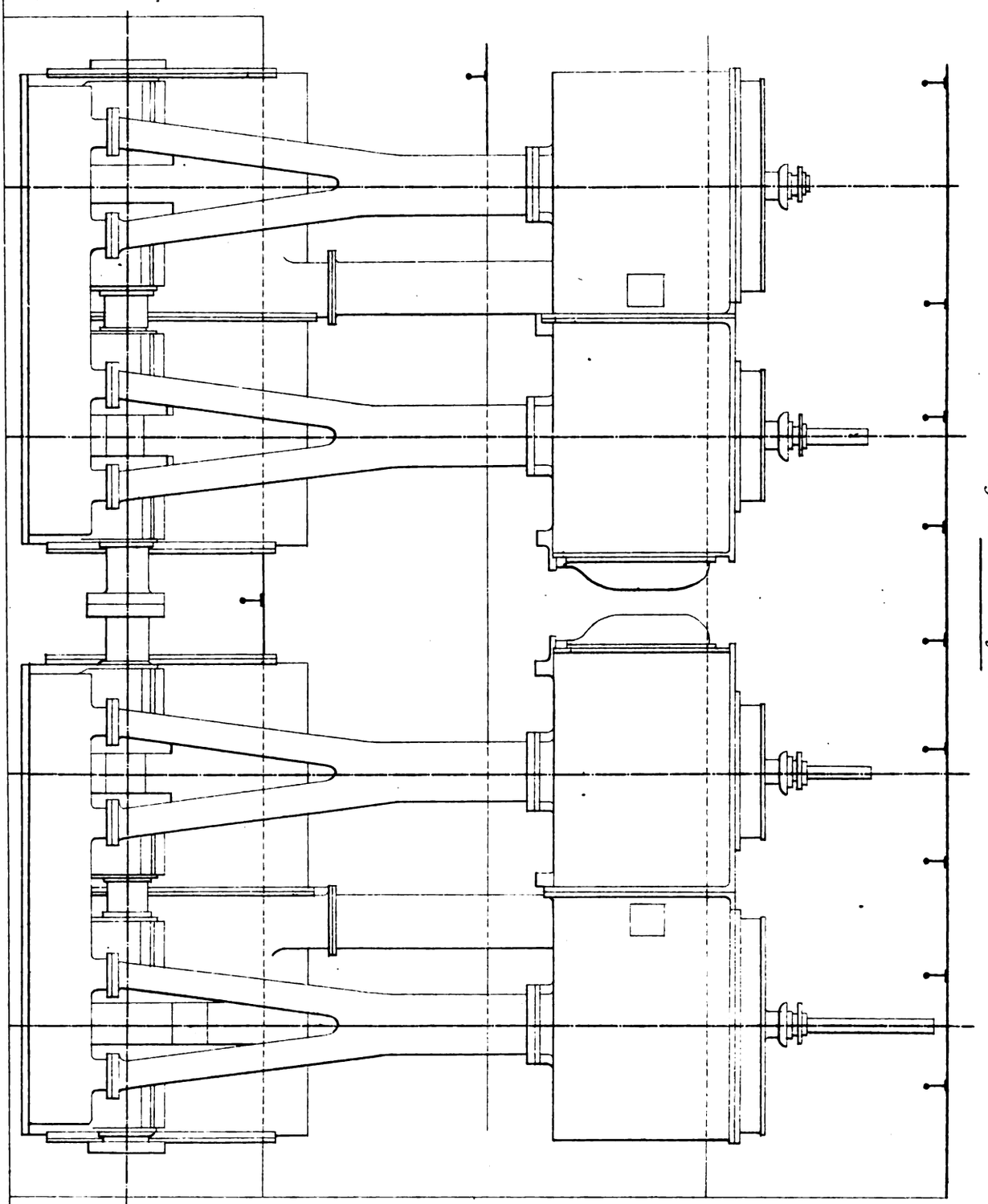

Compound Engines of the Pacific Mail Steamers
"City of Pekin" & "City of Tokio."

Digitized by Google

fitted with relief-valves on each end, and the covers are steam-jacketed, with the piston rods going up through them in a deep stuffing-box.

The high-pressure valve is double-ported, with a cut-off valve working on the back, and the steam pressure is removed from the back by means of a rectangular hollow frame, pressed out by flat springs, and connected with the valve by a thin copper plate expansion joint; the hollow part is connected to the condenser. The valve has sufficient lap on the steam side to cut off at $\frac{3}{4}$ of the stroke; and the cut-off valve follows from $\frac{1}{8}$ to $\frac{1}{2}$ the stroke, by changing the travel. The low-pressure valve is also double-ported, with steam lap to cut off at $\frac{3}{8}$ of the stroke; but without the pressure on the back being removed, both valves are counterbalanced by vacuum cylinders and pistons placed on the top of the valve chests. The high-pressure valves are driven by cast-iron eccentric pulleys, wrought-iron straps lined with hard brass, wrought-iron rods, double-bar Stephenson links, and steel valve-stems, the eccentric rods leading direct to the stems, making the travel of the valve and the throw of the eccentric equal; travel of the high-pressure valve, 7 inches. The valve gear of the low-pressure valve is similar, travel of valve 9 inches. The cut-off valve is driven by a similar eccentric rod, connected to a vibrating double-bar link, made adjustable, so that the travel of the valve can vary from 9 inches to about 5 inches, and so varying the point of cutting off when the engines are in motion. The valve facings on both cylinders are made of hard cast-iron, and bolted to the faces with countersunk bolts. Each pair of engines is started and reversed by a small steam engine (with a cylinder 10 inches diameter by 12 inches) and screw-gear connected to the Stephenson links through a reversing shaft.

The bed-plates are of box form, fitted with brasses which can be taken out without moving the shaft, and arranged for slipping up; they are babbited, and made all of one size, so that the spare brasses will fit either of the pillow-blocks; the pillow-block binders are of wrought-iron, the bed-plates are cast in halves, and bolted together and to the condenser. The columns are cast of box form, and with a fork on the lower end; they are bolted to raised flanges cast on the top of the bed-plate and on the bottoms of the cylinders; the crosshead slides are on the top end, the columns on the condenser side are short, and bolted to raised flanges on the top of the condenser. Each condenser is made in two sections, with flanges cast on to bolt to the bed-plate and columns; an extension is cast on each section, in which the air-pumps are located. Condensing surface in the two condensers about 10.660 square

Digitized by Google

feet, number of tubes 4000, diameter outside ¾ inch, exposed length 13 feet 9 inches; the tube plates are of brass 1⅛ inches thick, the two supporting plates are of brass ½ inch thick, the tubes are packed with wood packing. There are two air-pumps to each condenser, 22½ inches diameter by 2 feet 9 inches stroke; the buckets, valve-seats and guards, and lining of pump-chamber are of brass, the air-pump rods are covered with brass, the valves are of india-rubber, the bolts and nuts inside of the pumps are of brass. The air-pumps are connected to wrought-iron levers placed over the condensers, and worked from the main crossheads. There are two centrifugal circulating-pumps, one for each condenser, and each driven by an independent upright engine 12 inches by 14 inches stroke, exhausting into the condenser; the suction and delivery pipes both have croton or sluice valves (faced with brass) at the ship's side, and the suction pipes are fitted with bilge injection-pipes, valves and strainers.

The feed-pumps are four in number, 5½ inches diameter by 2 feet 9 inches stroke, single acting, the plungers, valves and valve-seats are of brass, and each pump has a safety-valve, air-vessel, and a stop-valve on the suction, and also on the delivery-pipe. There are four bilge-pumps similar to the feed-pumps, 5 inches diameter by 2 feet 9 inches stroke, and all of them are worked from the air-pump crossheads. There are also two single-acting trunk bilge-pumps 14 inches diameter by 18 inches stroke, worked from the forward end of the crank-shaft, and made to disconnect, so that they may be used in the event of a serious leak, and disconnected at other times.

The crank-shaft is of the best hammered iron, made in pieces and shrunk together; it is in two sections, united in the centre by a flanged coupling, journals 18 inches diameter by 24 inches long, crank-pins of steel 16 inches diameter by 17 inches long. The line shafting is 17 inches diameter throughout, and made in 20 feet lengths, united by flanged couplings; there is a short length next the propeller-shaft, to facilitate the removal of the propeller, and that part of the shaft on which the thrust collars are turned is also a short length, to facilitate the removal for adjustment. There is a bearing close to the crank-shaft, and one close to the stuffing-box on the propeller-shaft. The propeller-shaft is 18½ inches diameter, and covered at the bearing parts with tough brass ¾ inch thick.

The stern tube is of cast-iron, and fitted with two brass bushes lined with lignum-vitæ staves 1¼ inches thick, and set on end so as to take the wear on the end grain of the wood; the stuffing-box is fitted with a lantern brass, and a 2½ inch water-

Digitized by Google

Digitized by Google

Digitized by Google

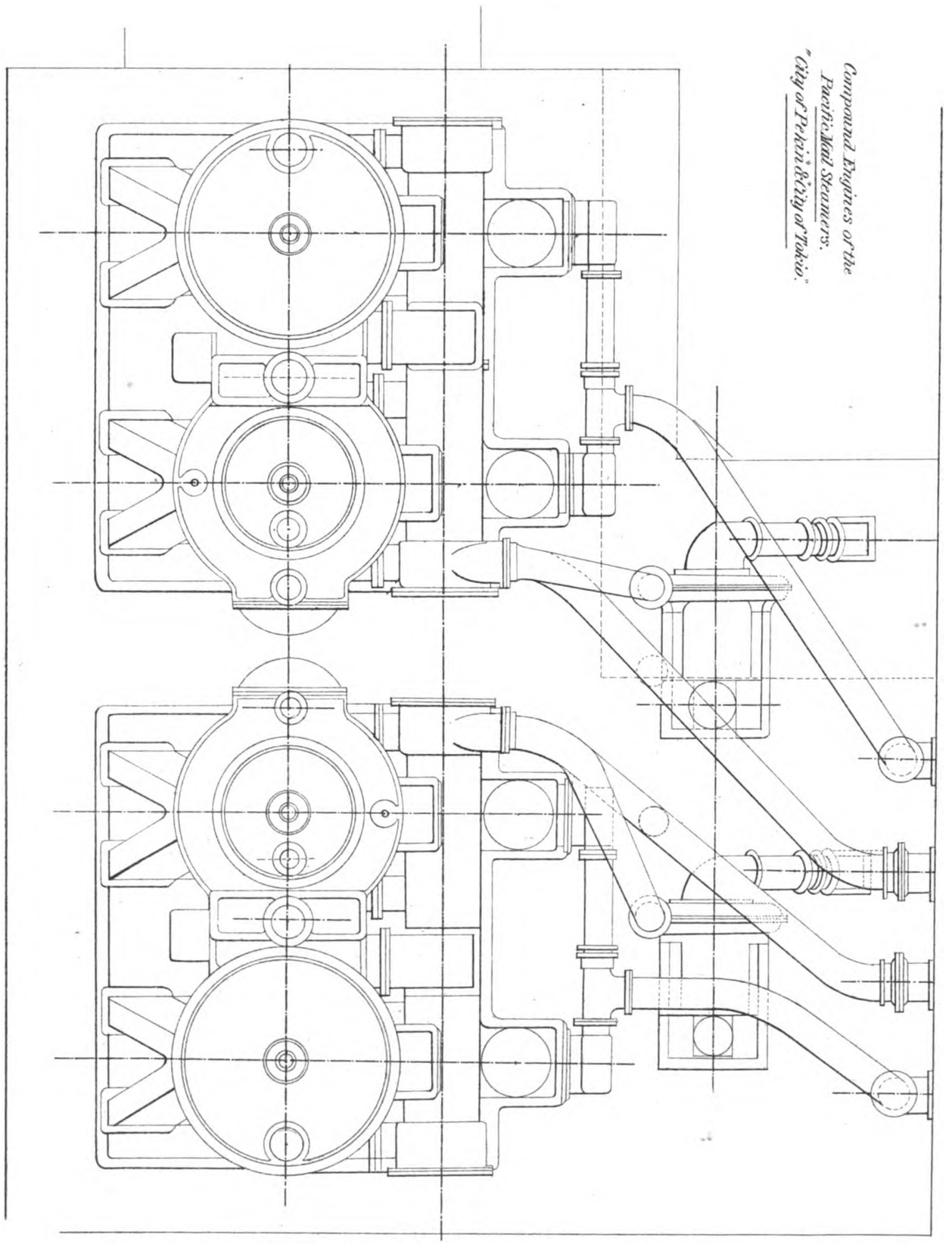

Compound Engines of the Pacific Mail Steamers. "City of Pekin" & "City of Tokio."

UNIV. OF MICH.
Digitized by Google

Digitized by Google

valve, to allow water to circulate through the stern tube. The shaft-bearing on the rudder post is also fitted with a brass bush lined with lignum-vitæ. The screw-propeller is made on the Hirsch plan, of cast-iron, with four blades cast separate from the hub, and bolted to it by a circular flange; the diameter of the propeller is 20 feet 3 inches, and the mean pitch is 29 feet; the propeller is secured to the shaft by means of two feathers opposite, cross key, and a nut on the shaft, with a fine thread to prevent unscrewing. The piston rods are of hammered scrap iron 8½ inches diameter, and carried up through a stuffing-box in the cylinder head for the purpose of steadying the piston when the ship is rolling; the upper end is 6 inches diameter, and the lower end is forked, and fitted with brasses (bored 8½ inches diameter by 12 inches long) wrought-iron cap, bolts, nuts and stoppers, also cast-iron gibs babbited 16 inches wide by 27 inches long. The connecting rods are of hammered scrap iron 8 inches diameter at the top end, 8½ inches at the bottom end, and 9¼ inches at the middle; the top ends are forked, and bored out to receive the crosshead; the bottom ends are fitted with brasses, (bored 16 inches diameter by 16½ inches long) caps, bolts, nuts, and stoppers; length between the centres 10 feet 6 inches. The crossheads are of hammered scrap iron 8½ inches diameter at the middle, with journals at the ends for the air-pump links. The engines are fitted with gear for turning them by hand when required. The thrust-bearing is on the second shaft from the crank-shaft, and has 12 wearing rings of hard brass locked in, and they can be taken out for adjustment; the shaft has 13 collars arranged to revolve in oil, wearing surface 2180 square inches.

There are 10 cylindrical boilers 13 feet diameter by 10 feet 6 inches long, with three furnaces in each 3 feet 2 inches diameter by 6 feet length of grate, and fire-brick bridge wall, back connection 2 feet 6 inches wide; there are 204 tubes in each boiler 7 feet 6 inches long by 3¼ inches outside diameter; the steam chimneys are 11 feet diameter by 15 feet high, with four flues in them 40 inches diameter; there is one chimney and smoke-pipe for each group of 5 boilers; diameter of smoke-pipe 8 feet 6 inches by 66 feet in height above the grate-bars.

Grate surface in 10 boilers,	570	square feet.
Fire " 10 "	16.470	" "
Superheating surface,	1380	" "
Total heating surface,	17.850	" "

The results on the trial trips were as follows: Maximum steam-pressure, 60 lbs.,

Digitized by Google

vacuum 28 inches, revolutions per minute 53, maximum I. H. P. 4000, average do 3500, speed of ship 15 knots. The "City of Peking" ran from Newport to New York, 174 miles, in 12 hours, or 14½ knots an hour; speed by log at 53 revolutions, 15½ knots.

These ships are fitted with two auxiliary boilers and feed-pump, and two water-tanks, two large steam-pumps, steam steering-gear, three cargo hoisting engines, steam windlass and capstan, two steam ash-hoisters, numerous ventilators, overhead railway to carry coal into the fire-room from the bunkers, apparatus for making fresh water for the use of the passengers and crew, and a Root exhauster worked by steam, for drawing foul air out of the ship. Draft of water loaded, 22 feet forward and 23 feet aft.

Both of these ships have been since 1874, and still are, running from San Francisco to Hong Kong, using 5 boilers or half the boiler power, coal consumed 50 tons per day, speed of ship 11 knots an hour, steam pressure in the boilers 55 lbs., average I. H. P. 2500, or about 1.8 lbs. coal per I. H. P. per hour. The Indicator Diagram of the "City of Tokio" are given on the following page.

Digitized by Google

INDICATOR DIAGRAMS.

STEAMSHIP "CITY OF TOKIO."

Nov. 18, 1874, - - - - - - - - - - Scale 16 lbs. = 1 in.
Steam 6 lbs., - - - - - - - - - - Revo. p. m. 51.
Vac. 28 in., - - - - - - - - - - Feed water 98°.
Sea water 66°, - - - - - - - - - - Discharge water 104°.

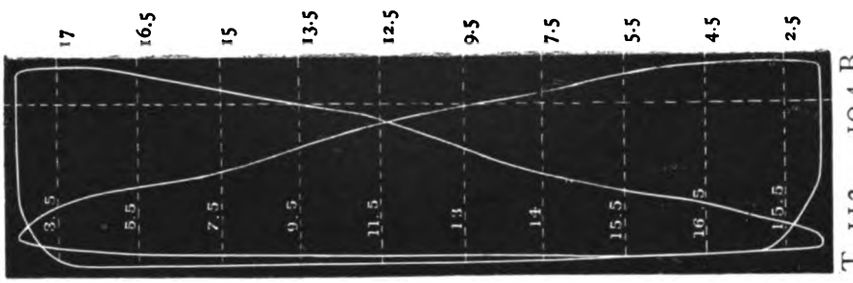

T. 112. 10.4 B. mean 10.8.

$$88 = \frac{6082 \times 10.8 \times 459}{33000} = 913 \text{ I. H. P.}$$

STEAMSHIP "CITY OF TOKIO."

Nov. 18, 1874, - - - - - - - - - - Scale 24 lbs. = 1 in.
Steam 51 lbs., - - - - - - - - - - Revo. p. m. 51.
Vac. 28 inches, - - - - - - - - - - Feed water 98°.
Sea water 66°, - - - - - - - - - - Discharge water 104°.

I. H. P. in 4 cylinders = 2448.

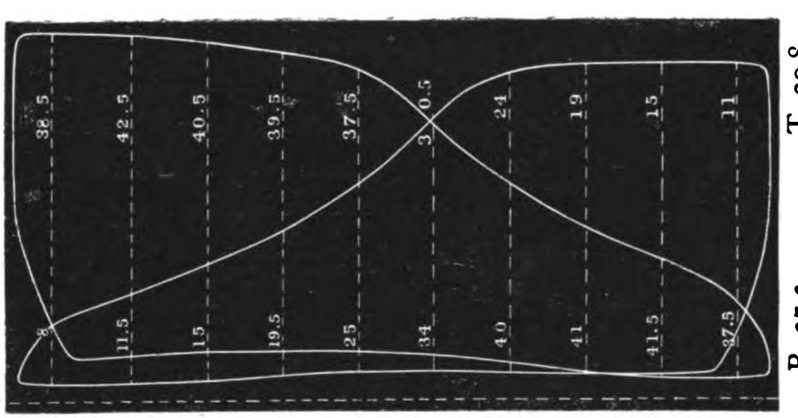

T. 29.8. B. 27.3. mean 28.55.

913
811
1724
2
3448 I. H P.

$$51 = \frac{2042 \times 28.55 \times 459}{33000} = 811 \text{ I. H. P.}$$

Digitized by Google

CHAPTER XII.

ENGINES OF THE PACIFIC MAIL STEAMSHIPS "CITY OF SAN FRANCISCO," "CITY OF NEW YORK," AND "CITY OF SYDNEY." (PLATES XII., XIII.) DESIGNED BY THOMAS MAIN OF NEW YORK. CONSTRUCTED BY JOHN ROACH & SON. 1875.

The Pacific Mail Steamer "City of San Francisco," "City of New York," and "City of Sydney," were built at Chester on the Delaware, by John Roach & Son, of New York and Chester, Pa., and are 352 feet in length over all, 40 feet beam, and 28 feet 10 inches deep under the spar deck.

These ships are what are termed three-deck steamships, with the addition of a hurricane deck running all the way forward and aft, and an orlop deck additional, forward, extending from the forward coal bunker bulkhead to the stem. The ships have three masts, bark rig, straight stem, no bowsprit, and overhanging elliptical stern.

The engines were built at the Morgan Iron Works, New York, and put on board at Chester, and are compound surface condensing, with cranks at right angles, and the air, circulating, and feed-pumps, and one bilge-pump, are independent of the main engines. They are worked by a separate pair of engines, and are not affected by the racing of the main engines in rough weather. They are kept at work when the ship is laying at the dock under steam, or temporarily stopped at sea. They maintain the vacuum in the condenser, which makes the main engines start more readily, and enables the engineers to blow the waste steam into the condenser by a special valve and pipe, instead of blowing it into the atmosphere through the escape pipe to the great annoyance of the passengers; by this means the steam is condensed and returned to the boilers, the same as when the ship is under way. The cylinders of the main engines are 51 inches and 88 inches diameter, respectively, and 5 feet stroke. The linings are cast separately and bolted in, the annular space around them forming a steam-jacket; the cylinder covers and bottoms are also steam-jacketed. The main valves for the high-pressure cylinder are short single-ported valves, one placed at each end of the cylinder, and arranged to cut off at

Digitized by Google

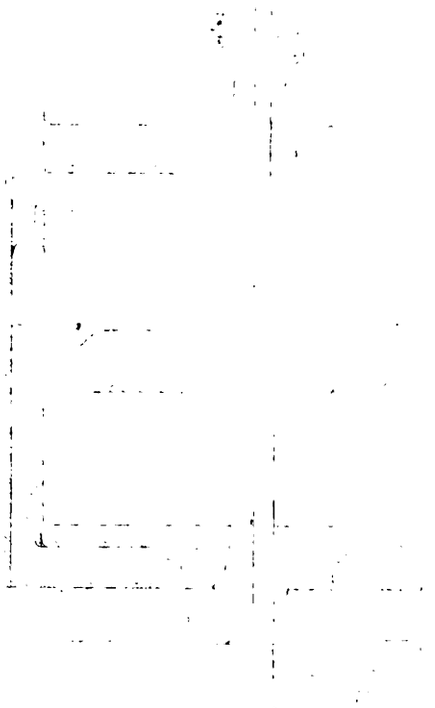

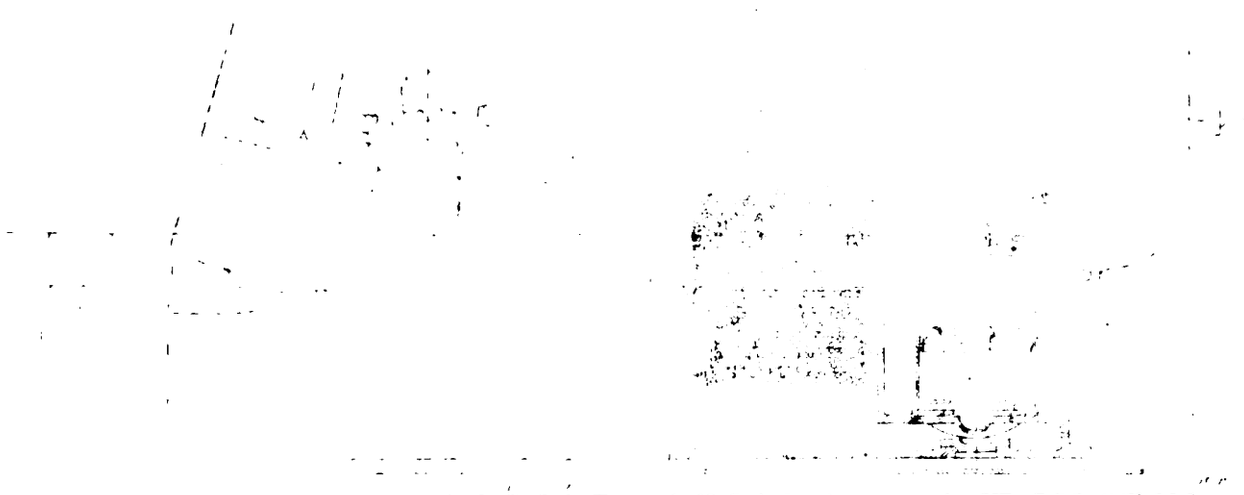

Digitized by Google

Digitized by Google

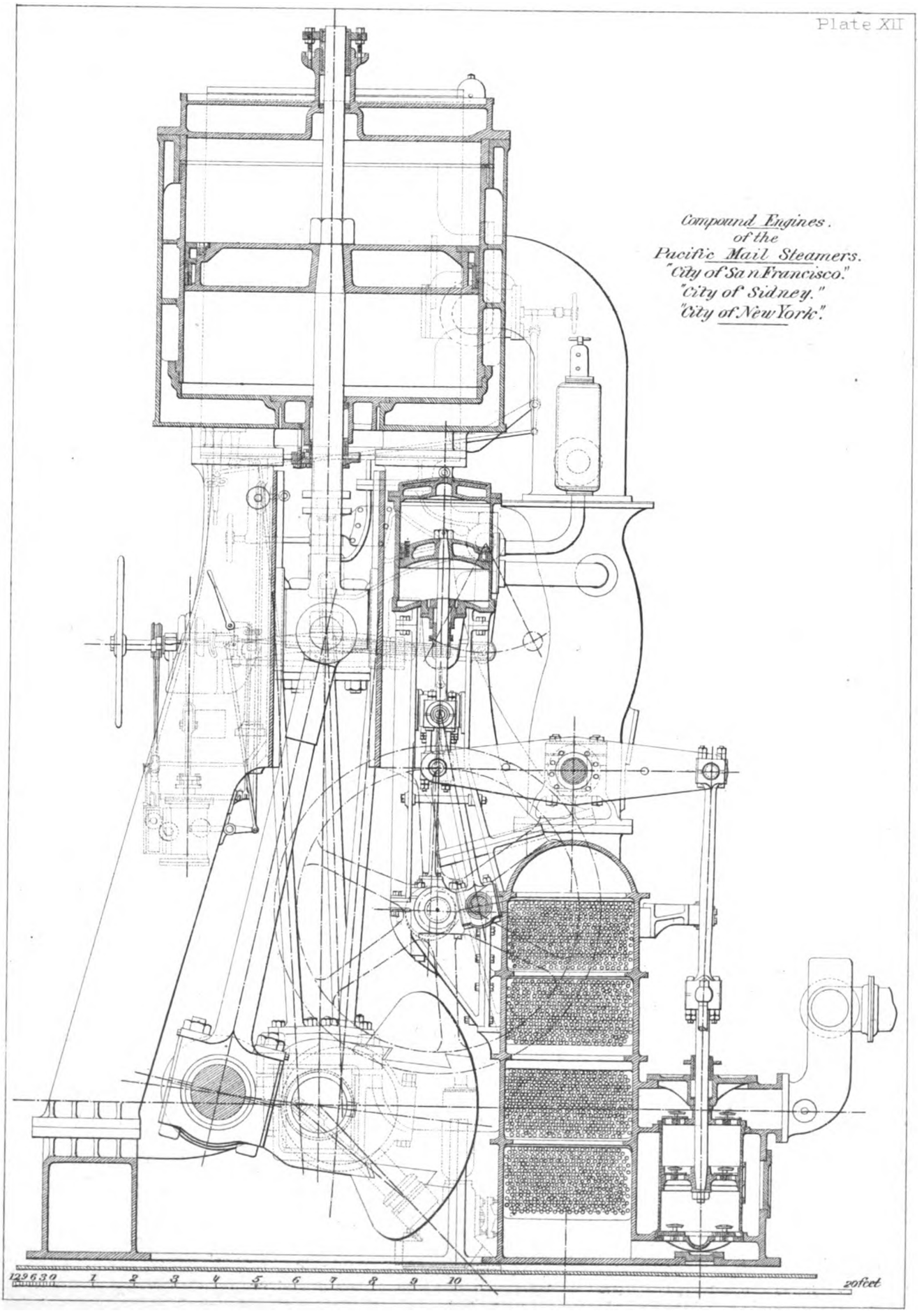

Digitized by Google

Digitized by Google

Digitized by Google

Compound Engines of the Pacific Mail Steamers "City of San Francisco," "City of New York," "City of Sidney."

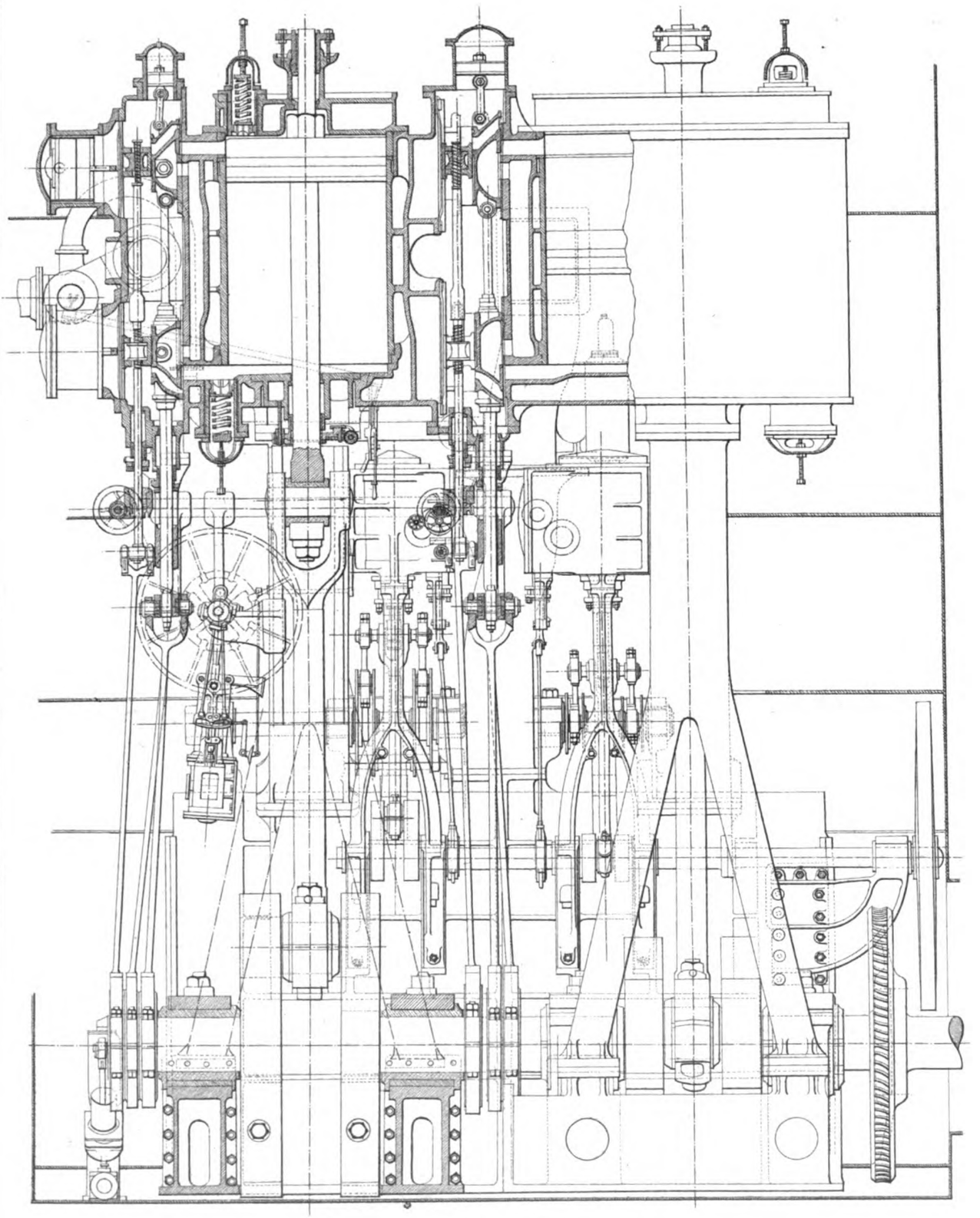

Digitized by Google

Digitized by Google

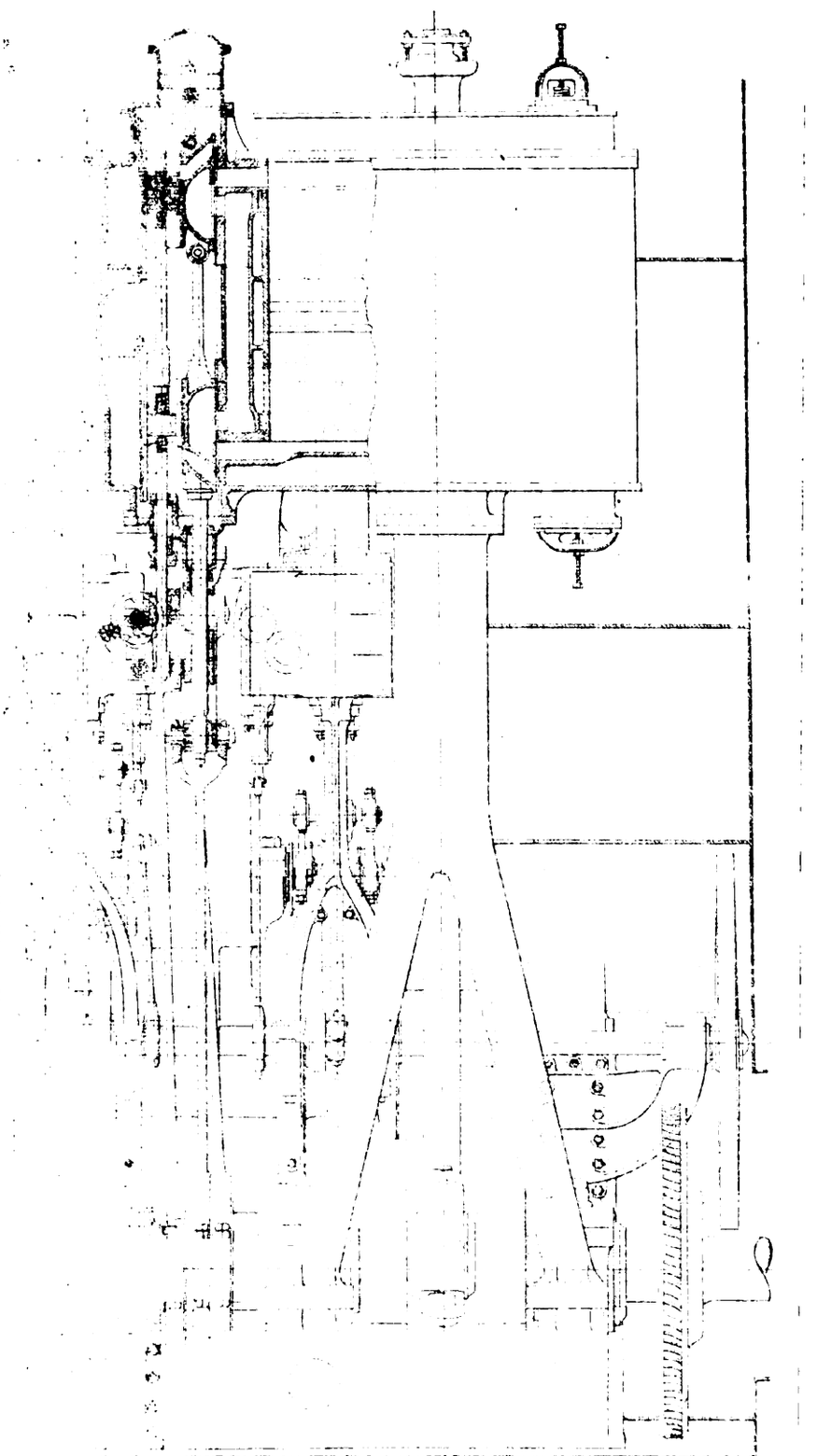

Digitized by Google

about ⅞ of the stroke. A plain plate expansion-valve works on the back of each valve, adjustable by right and left screws, to cut off from $\frac{1}{10}$ to ⅞ of the stroke. Each main high-pressure valve is balanced by a cylinder and piston 20 inches in diameter, connected to the valve. The space behind the piston is connected to the vacuum part of the condenser. The expansion eccentric is set opposite to the crank-pin, and the eccentric rod leads direct to the expansion-valve stem, which is revolved by means of worm gear, by which means the cut-off can be varied at pleasure while the engines are working. The main high-pressure valve is driven, as shown, by a cast-iron eccentric pulley, wrought-iron strap lined with hard brass, wrought-iron rod, and double bar link, and steel valve stem, making the travel of the valve and the throw of the eccentric equal, travel of high-pressure valve 10 inches, travel of high-pressure expansion valve 12 inches, high-pressure steam ports (single) 4½ inches by 36 inches long, high-pressure cut-off ports 2¾ inches by 33 inches long, diameter of the counterbalance cylinder for high-pressure valve 8½ inches.

The main valves for the low-pressure cylinder are also short, single-ported valves, with expansion valves on the back, similar in every respect to the high-pressure valves (except that they have no balance cylinders to remove the pressure), travel of low-pressure valve 12 inches, travel of low-pressure expansion valve 14½ inches, low-pressure steam ports (single) 5½ inches by 60 inches long, diameter of the counterbalance cylinder 15½ inches. The valve facings on both cylinders are made of hard cast-iron, and bolted to the faces with countersunk bolts.

The steam reversing gear consists of a starting engine 10 inches in diameter by 12 inches stroke, connected to a reversing screw fitted with a crosshead, which is connected to the rock shaft and reversing links in the usual way; the starting engine is also fitted with a self-acting reversing gear, which will reverse it about the time the main engines start, and so prevent the crosshead overrunning and sticking on the collars; by this means the main engines can be instantly started or reversed, even when cutting off at the shortest grade, on account of the vacuum being always formed by the independent pumping engines. For warming up the cylinders before starting, small pass-over valves are provided at each end of both cylinders for admitting steam; and the main and cut-off valves are prevented from leaving their faces by bars fitted at their backs $\frac{1}{16}$ of an inch clear; there is also a flat spring on the back of each cut-off valve to keep them and the main valves against their faces when there is no steam pressure. The pistons are each 14 inches deep, and are

Digitized by Google

fitted with one 9-inch piston rod, carried through the top and bottom of the cylinder, top end 6½ inches in diameter. The lower end is forked and fitted with brasses 9½ inches in diameter and 14 inches long, also cap, bolts, nuts, and gibs for wearing on the guides.

The cylinders are carried on the port side by forked, hollow cast-iron columns standing on the bed-plate, with the guide-plates bolted on separate, and inclosing a hollow space for water circulation, when going ahead. On the starboard side the supporting columns stand on the condenser, and to which they are securely bolted; the guide-plates are also bolted to these columns. The high-pressure cylinder casting is made nearly as large as the low-pressure one, the annular space forming the receiver between the engines.

The condenser is cast in two pieces, each having an air-pump cast on, also nozzles for bolting to bed-plates, columns, exhaust pipe, etc. It contains 2380 tinned brass tubes ⅝ inches diameter by 13 feet 9 inches exposed length, the water passing twice through them, first through the upper section, then descending and going through the lower section, and so on overboard; by this means the steam strikes the coldest surface on entering the condenser, which tends to form the vacuum more rapidly, and the water of condensation leaves the hottest condensing surface, and so will be delivered into the hot well at a higher temperature than it would if the injection water flowed through the condenser tubes in the opposite direction. The tube-plates are of hard cast-iron 1⅜ inches thick; the tubes are packed with paper packing, and supported at two places in their length by cast-iron plates 1 inch thick. The exhaust pipe is of cast-iron 25 inches by 20 inches, with an expansion joint in the middle, and under it there is a deflecting plate 31 inches wide, cast across the condenser, above the tubes, which prevents the steam from striking them direct.

Condensing surface 6425 square feet; the pumping engines consist of levers working over the condensers, with the pumps connected to the one end and the steam cylinders to the other; there is a crank-shaft with a counterbalanced fly wheel connected to the engines as shown, for the purpose of regulating the action of the pumps, and for starting them in motion; these engines make about the same number of revolutions as the main engines. The steam cylinders are 16 inches and 27 inches diameter respectively, by 2 feet stroke; they work at right angles, they are each fitted with a plain slide valve, with lap sufficient to cut off at about ⅞ of the stroke, and there is a small receiver between them. There are two single acting

Digitized by Google

air-pumps, each 24 inches diameter by 2 feet stroke, two double acting circulating-pumps each 14½ inches diameter by 2 feet stroke, two single acting plunger feed-pumps, each 6 inches diameter by 2 feet stroke, and one single acting plunger bilge-pump, 6 inches diameter by 2 feet stroke; the arrangement of these pumps and their valves is clearly shown on the illustration. There is also one single acting plunger bilge-pump 8 inches diameter by 13½ inches stroke, worked from the forward end of the crank-shaft of the main engines as shown, which can be disconnected when desired.

The bed-plate is cast in two sections, bolted together and to the condenser, each having two pillow blocks, with journals 17 inches diameter by 26 inches long, and so arranged that the bottom brass can be taken out and adjusted without removing the shaft; the brass is circular on the bottom, with a chock under, which is circular on the top and flat on the bottom, to admit of slipping up; there is also a chock on each side of the brass, which when removed allows the brass to be rolled out.

The crank-shaft is made in pieces and shrunk together, the cranks have counter-balances forged on opposite to the pins, crank-pins 16 inches diameter by 18 inches long, line shafting 16 inches in diameter, propeller shaft 17½ inches in diameter, cased with tough brass ¾ of an inch thick, and running on three bearings of lignum vitæ staves (locked in), one on the rudder post and one on each end of the stern-pipe; the wear is taken on the end grain of the wood. The thrust shaft has 13 collars forged on, and the thrust-block has 12 circular rings of hard brass locked in. They can readily be taken out for adjustment without removing the shaft; there is also a pillow block at each end of the collars to take the weight of the shaft, while the collars take the thrust, and so reducing the tendency to get hot; the lower edges of the shaft collars revolve in a trough of oil, and are constantly kept moist; wearing surface 1917 square inches. The lower half of the line-shaft bearings is filled with hard babbit metal. The screw propeller is made of strong cast-iron, has four blades, and is 20 feet in diameter by 25 feet mean pitch, the centre part is of globular shape, the blades are cast separate, with flanges recessed into the centre and securely bolted with steel bolts and brass nuts. There are six cylindrical boilers, each 13 feet in diameter, inside the smallest course, by 10 feet 6 inches long, with three furnaces in each, 3 feet 3 inches in diameter by 6 feet 6 inches length of grate, fire-brick bridge wall, back connection or combustion chamber, 2 feet 6 inches wide, one behind each furnace. There are 204 tubes in each boiler, 7 feet 6 inches

Digitized by Google

long by 3¼ inches outside diameter. There is one steam chimney or superheater (with which all the boilers connect) 15 feet high by 12 feet in diameter, with four flues through it, each 3 feet 8 inches in diameter, thickness of iron in the shell of boiler ⅞ of an inch, superheater $\frac{13}{16}$ of an inch, furnace crowns ½ of an inch, ash pit ⅝ of an inch, tube sheets $\frac{11}{16}$ of an inch. The steam is taken from the boilers through tinned copper dry pipes near the top, and by means of a system of valves and pipes can be delivered direct to the engines, or through the superheater, as may be desired. The furnaces, and flues in the superheaters, are braced by angle iron; the furnace doors have a perforated lining and register for the admission of air, and there are dampers fitted in the chimney and ash pits. The boilers work at a pressure of 80 pounds above the atmosphere, and were tested with a water pressure of 120 pounds per square inch, to conform to the United States law; smoke pipe 8½ feet in diameter by 66 feet above grate; grate surface in six boilers, 378 square feet; fire surface in six boilers, 9,900 square feet; superheating surface, 750 square feet; total heating surface, 10,650 square feet. The results on the trial trip were as follows: Steam pressure, 80 pounds; vacuum, 28 inches; revolutions, 55 per minute; revolutions of pumping-engines, 55 to 60 per minute; speed, 14 knots per hour.

The "City of San Francisco" made the run from New York to San Francisco, calling at Panama, and using only four boilers, in 58½ days running time, to Panama in 46 days, and from there to San Francisco, without stopping, in 12½ days, average speed during the voyage about 10½ knots; revolutions, 40 to 42; coal per day, 28 tons; draft on leaving New York, 22 feet.

The ship is fitted with an auxiliary boiler, feed-pump, and water-tank, two steam-pumps, steam steering-gear, steam windlass, engine for turning the main engines when overhauling, three cargo hoisting engines, two steam ash hoisters, ventilators, overhead railway to convey coal into the fire-room from the bunkers, and apparatus for making fresh water for the use of the crew and passengers. The "City of San Francisco" arrived at San Francisco on November 24, 1875, and left again for Sydney, Australia, December 10.

The sister ship, "City of New York" left New York for San Francisco December 18th, and the "City of Sydney" on December 20th, 1875, both having a mean draft of water of 22 feet.

The "City of San Francisco" was wrecked on sunken rocks between Panama and San Francisco, and the "City of New York," and "City of Sydney," are now running very successfully between San Francisco and Sydney, Australia.

Digitized by Google

INDICATOR DIAGRAMS.

S. S. "City of San Francisco," Nov. 26, 1875, throttle-valve open; steam, 68 lbs.; vac., 26 in.; revo., 46; sea water, 64°; discharge water, 108°; feed water, 110°; engine room, 82°; cut-off, 24 in.; coal per hour, 3,267 lbs.

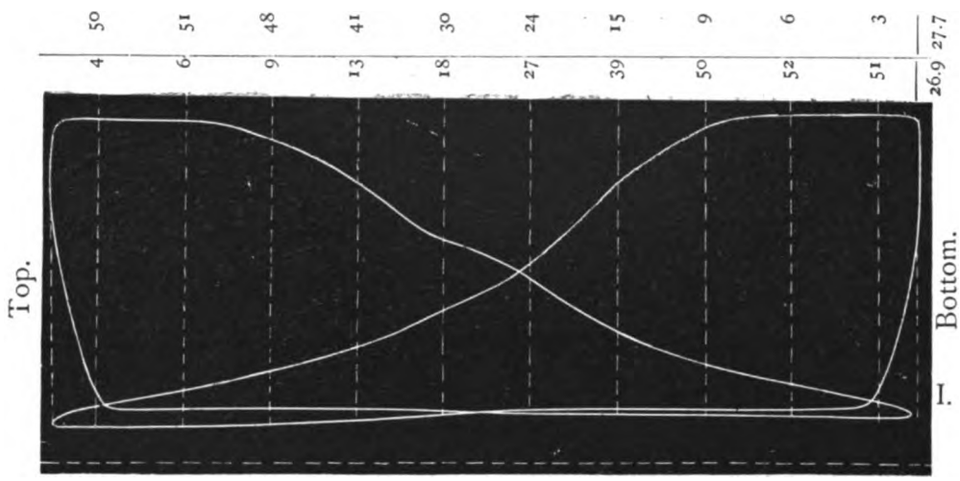

I. H. P. 804
709
1513

Scale of Indicator, 32 lbs. to 1 inch.

S. S. "City of San Francisco," Nov. 26, 1875, throttle open; steam, 68 lbs.; vac., 26; revo., 46 per minute; sea water, 64°; discharge water, 108°; feed water, 110°; engine room, 82°; cut-off, 20 in.; coal per hour, 3,267 lbs.

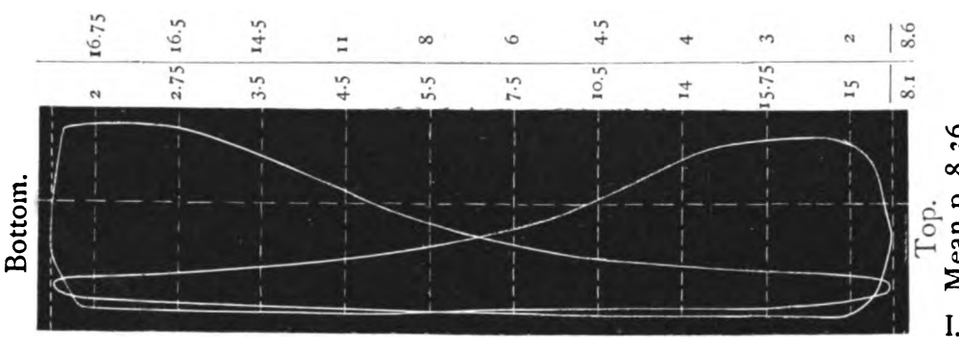

I. H. P. 709
804
1513

Scale of Indicator, 16 lbs. to 1 inch.

Digitized by Google

CHAPTER XIII.

ENGINES OF THE STEAMSHIP "DECATUR H. MILLER." BUILT BY THE HARLAN & HOLLINGSWORTH COMPANY, WILMINGTON, DEL.

THE Steamship "Decatur H. Miller," of the Merchants' & Miners' Line, running between Baltimore, Norfolk and Boston, is 258 feet between the perpendiculars, with a beam of 38 feet 6 inches molded, and 25 feet 3 inches depth from top of keel to top of upper deck beams; tonnage $2296\frac{14}{100}$ tons.

The engines (Plates XIV., XV.) are of the double compound, surface-condensing type, with high pressure cylinders set over the low pressure; the diameter of the small or high pressure cylinders which are two in number, is 24 inches; that of the low pressure or condensing cylinders, 54 inches; with a piston stroke of 48 inches. They are fitted with slide valves, with variable cut-off on the back of the high pressure valves; the main valves are worked by the regular double bar link, and reversed by a direct-acting steam cylinder, having a stroke equal to the throw of the links, steam being admitted by hand and closed by the motion of the piston rod in any direction or position. Relief valves are placed on the top and bottom of each cylinder, and are set down by a spring to any given pressure. The connecting rods are forked at the crosshead, and are fitted with straps, gibs and key. The diameter of crosshead journal is 6 inches, by $6\frac{1}{2}$ inches long; the crank-pin is 12 inches in diameter and 13 inches long, made of steel. The main journals are 14 inches diameter by 20 inches long. The bed-plate is cast in two pieces, and bolted together and to the condenser; the latter is in two halves and bolted together, and it contains 1226 tubes $\frac{3}{4}$ of an inch in diameter, with a surface of 3,008 square feet. The piston rods are made long enough to pass up through the low pressure cylinder, and take the piston of the high pressure cylinder; the rod through the low pressure cylinder being $6\frac{1}{4}$ inches, and reduced to $4\frac{1}{4}$ inches in the high pressure cylinder, secured to the pistons and crosshead by a nut. All the bearings are of composition and filled with Hart's White Lining Metal.

There is one air-pump worked from the main crosshead of after engine by levers, and is 24 inches in diameter, with a stroke of 24 inches. The feed and bilge-pumps

Digitized by Google

Digitized by Google

Digitized by Google

Digitized by Google

Boiler of the Steamer
"Decatur H. Miller"
Designed & Constructed by
The Harlan & Hollingsworth Co.
Wilmington, Del.
1879

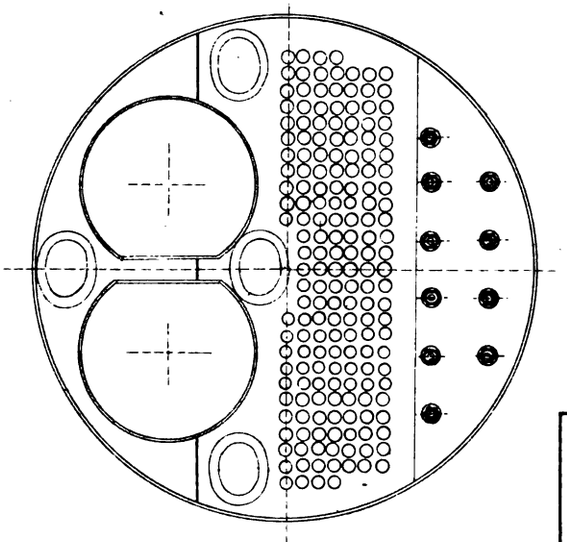

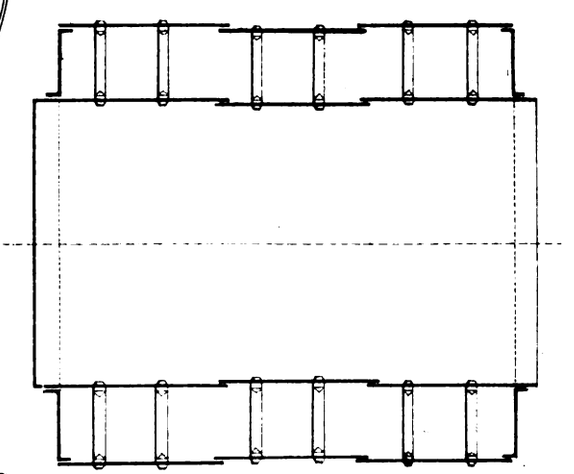

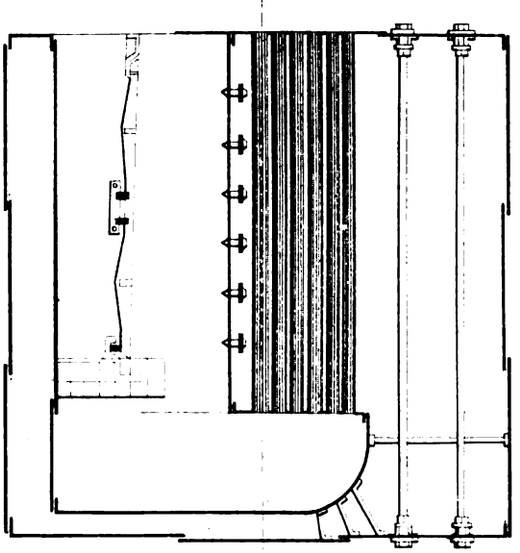

Digitized by Google

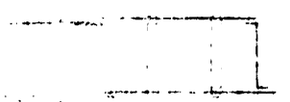

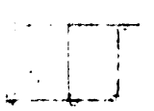

Digitized by Google

are worked from the air-pump crosshead, the former being two in number, with a diameter of 3¼ inches; the latter, single, with a diameter of 3½ inches—all with a stroke of 24 inches. The engines are provided with an independent circulating pump, the engine having a cylinder of 6 inches diameter by 8 inches stroke; the water passing through the condenser twice, entering at the top and discharging from the bottom.

The main engines are provided with a small turning engine, for the purpose of turning the engine over when there is no steam; it is bolted to top of condenser, and gears by a worm to a worm wheel on shaft.

The cranks are set at right angles, the crank-shaft being in two pieces, exactly duplicates of each other and interchangeable, in case of breaking or losing the crank-pin; the line shaft is 12½ inches in diameter, cased with composition through the stern-pipe.

The propeller is 14 feet in diameter, with a pitch of 22 feet; the blades are of steel with cast-iron hub, the blades being fastened on with 7 steel bolts 2¼ inches in diameter—nuts also of steel.

The boilers are single-ended, four in number, and fired from the middle of ship—fire room being between them running fore and aft—the diameter being 11 feet, length 11 feet; there are two furnaces in each boiler 46 inches in diameter, one side being flattened for water-leg; the grate bars are in two lengths 6 feet 6 inches long. There are 178 three-inch tubes 8 feet 3 inches long in each boiler. There is one steam chimney 9 feet 6 inches in diameter by 10 feet long. The boilers are braced and stayed for a working pressure of 85 lbs. per square inch.

REMARKS.—The ship has now (Feb'y, 1881) been in active service nearly two years, with great satisfaction to her owners. Her engines have developed at sea 1248 indicated horse-power, with *less* than two pounds of coal per indicated horse-power per hour. Thos. Jackson, Esq., a member of the H. & H. Co., is the managing engineer of that celebrated Firm.

Digitized by Google

CHAPTER XIV.

ENGINES OF THE MORGAN STEAMSHIPS "LONE STAR," "NEW YORK," "ALGIERS," AND "MORGAN CITY." BUILT BY THE HARLAN & HOLLINGSWORTH COMPANY, WILMINGTON, DEL.

THE Steamships "Lone Star," "New York," "Algiers," and "Morgan City," belonging to the Morgan Line, and running from New York to New Orleans, are 275 feet between posts, 38 feet 4½ inches molded breadth, and 29 feet 9 inches molded depth—three-deck ships—tonnage 2284.

The engines (Plates XVI., XVII.) are single, low pressure, surface-condensing, with poppet-valves and Sickle's variable cut-off. The cylinders are 50 inches diameter with a piston stroke of 60 inches; there are two piston rods, each five inches diameter, with wrought-iron crossheads and brass slides; the valves and seats are of composition, are made large in order to lift as little as possible, and are worked by hook motion from an eccentric on shaft. The diameter of crosshead journal is 9 inches by 11 inches long; the crank-pin is 12 inches diameter by 14 inches long, and the main journals are 14½ inches diameter, the forward one being 24 inches long and the after one 28 inches long. The air-pump is worked from the main crosshead by levers in the usual way, and is 30 inches in diameter with a stroke of 19⅜ inches. The feed-pumps are two in number and are worked from the air-pump crosshead—they are each 4 inches diameter of plunger, with a stroke of 19⅜ inches.

The bilge-pump is bolted to the condenser and worked by an arm attached to the air-pump rock shaft; it is 4½ inches diameter, with a stroke of 11⅝ inches.

The condenser is of square box form, and is bolted to the bed-plate; it also forms part of the engine frame; it has 2,000 five-eighth tubes; the circulating water is forced through the tubes by an independent centrifugal pump, driven by a small engine with a cylinder 10 inches diameter by 8 inches stroke.

The propeller is 13 feet 3 inches diameter, with a pitch of 21 feet 3 inches; the blades are of steel, the hub of cast-iron; the line-shaft is 12½ inches diameter, sheathed with composition through the stern-pipe.

The boilers are single-ended, two in number, and fired from forward; the diameter

Digitized by Google

UNIV. OF MICH.

Digitized by Google

Digitized by Google

Digitized by Google

Digitized by Google

Digitized by Google

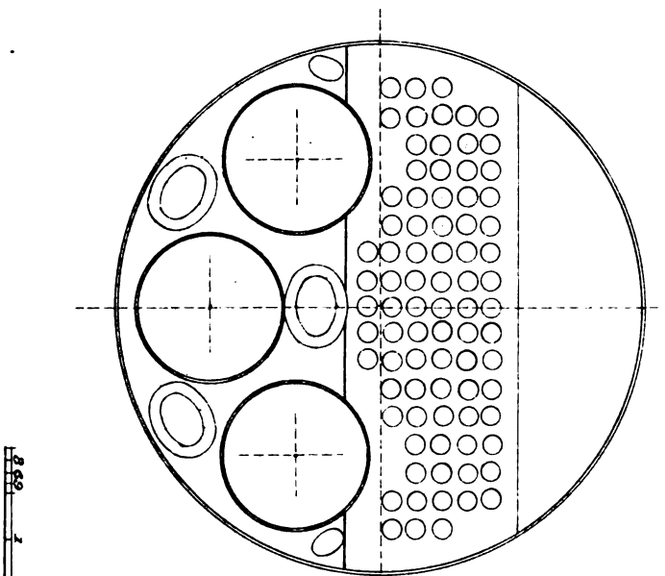

Boilers of the
Morgan Line Steamers.
"Lone Star," "Algiers,"
New York" & "Morgan City."
Designed & Constructed by
The Harlan & Hollingsworth Co.
Wilmington, Del.
1879.

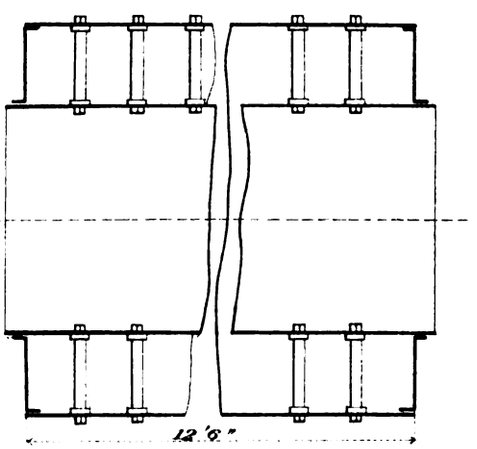

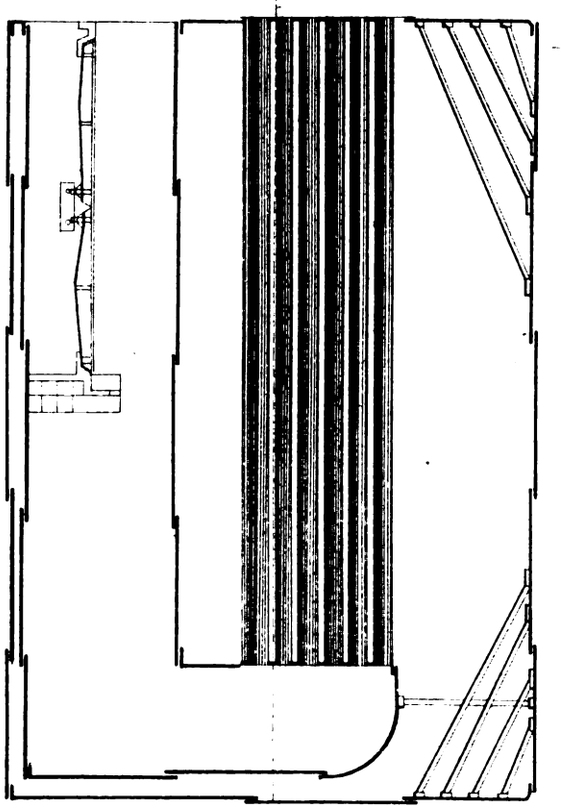

F. Bourquin Lith. Phila.

Digitized by Google

Digitized by Google

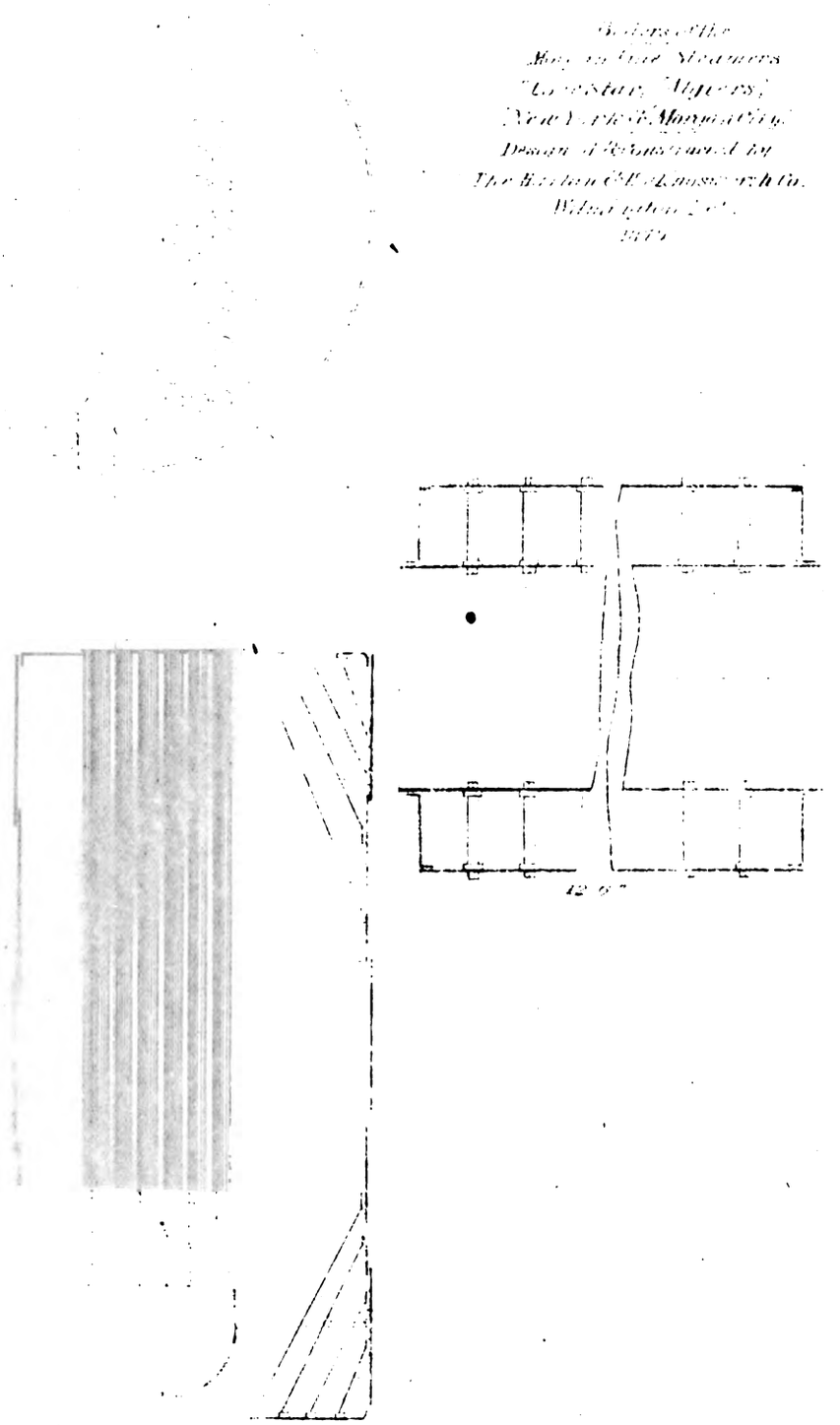

Digitized by Google

of each is 11½ feet, and length 17 feet; there are 3 furnaces in each, 39 inches diameter, with grate bars 7 feet long, in two lengths; there are 82 tubes 5 inches in diameter and 14 feet long in each boiler; there is one steam chimney 8 feet 6 inches diameter by 12 feet 6 inches long. The whole stayed and braced to carry a working pressure of 60 lbs. per square inch.

REMARKS.—From the fact that steam is cut off at 6 inches of the stroke, and expands in the cylinder the remainder of the stroke (equal to 10 expansions), the result in economy of fuel, is equal to that obtained in use with the ordinary compound engine.

Digitized by Google

CHAPTER XV.

COMPOUND ENGINES AND BOILERS BY THE WM. CRAMP & SONS, SHIP AND ENGINE BUILDING COMPANY, PHILADELPHIA, PA. (PLATES XVIII., XIX.)

PLATE XVIII. illustrates the type generally adopted by Messrs. Cramp & Sons for compound marine engines. The general arrangement of the engine is clearly shown in the plate. It is carried on two frames and columns, in the lower part of which is carried the surface condenser. The air-pump is worked by a couple of levers attached to the crosshead of the low pressure engine. The connection between this engine, air-pump and condenser, is shown in Fig. 1. The guides are of the "slipper slide" variety, and are bolted to the inner faces of the frames.

The arrangement of slide-valves is shown clearly in Fig. 2. In Fig. 1 will be seen the arrangement for starting and stopping the engine. The links, which are of the double-bar type, are moved backwards and forwards by steam, and the engine can be instantly reversed under a full head of steam by merely moving the small lever A, Fig. 1, which can be done by a child. The reversing engine is shown in B, Fig. 1. The air-pump P, Fig. 1, and the condenser C, are so clearly shown as to need no explanation.

Taken as a whole, these engines are good specimens of the latest and best American practice, and reflect great credit upon the eminent builders. The boilers are of the cylinder shell type (Plate XIX.), easily accessible for cleaning or repairs; plenty of steam and water space; of good design and well constructed. They are braced to withstand a heavy pressure of steam, steam freely, and are economical in coal.

Digitized by Google

Digitized by Google

[illegible], SHIP AND ENGINE

[illegible]

[illegible] Messrs. Cramp & [illegible] is [illegible] the engine is [illegible] in the lower part of [illegible] worked by a couple of [illegible] The connection [illegible] 1. The guides are [illegible] of the frames.

[illegible] in Fig. 1 will be seen [illegible] which are of [illegible] and the engine can [illegible] the small lever A, [illegible] shown in B. Fig. 1. [illegible] is to need no ex-

[illegible] and best [illegible] the boilers are of [illegible] or repairs, plenty [illegible]. They are braced [illegible] economical in coal.

Digitized by Google

Plate XVII

Compound Marine Engines.
Designed & Constructed by
Wm. Cramp & Sons.
Philada, Pa.

Fig II.

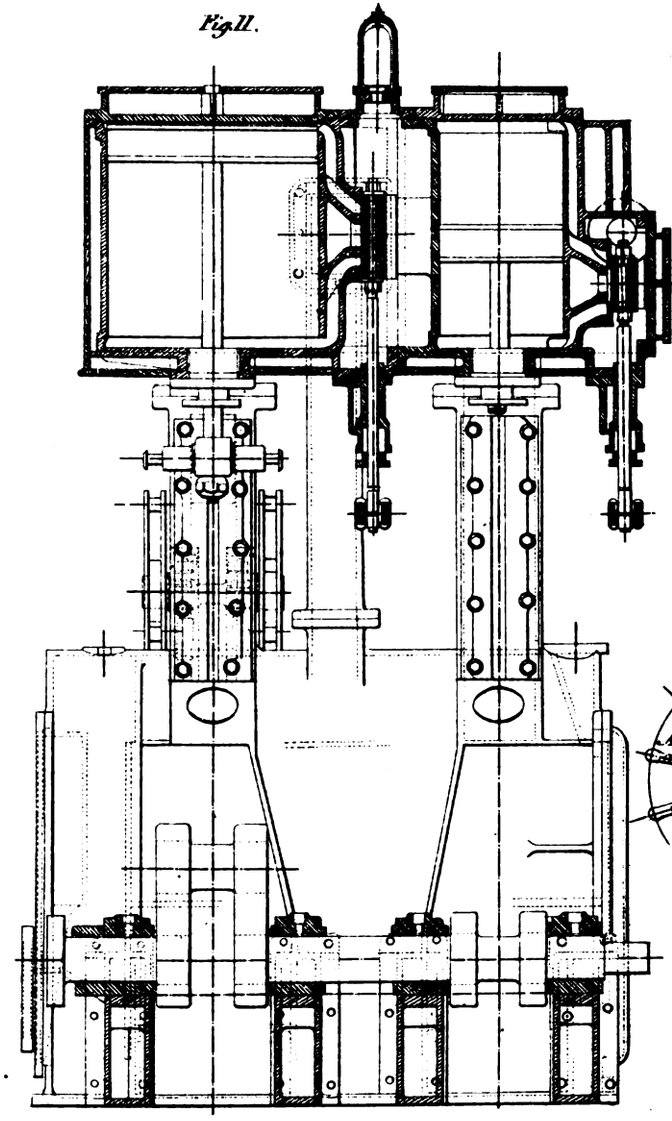

Fig I.

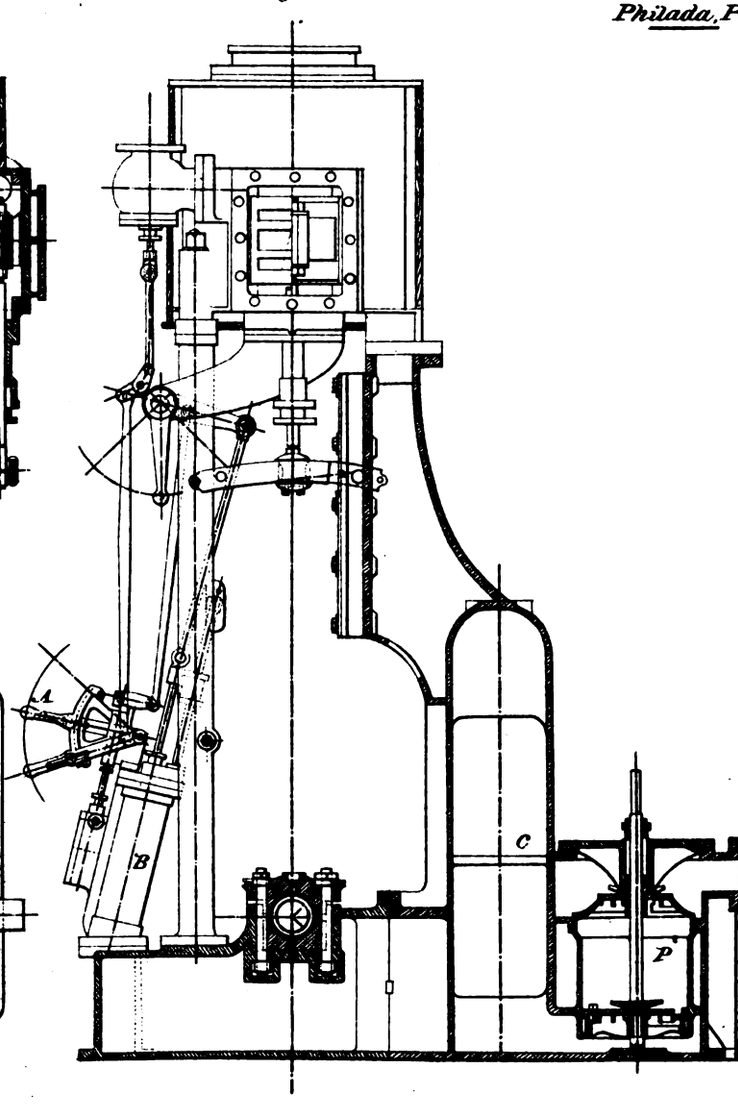

Digitized by Google

Digitized by Google

Digitized by Google

Digitized by Google

Marine Boilers
Designed & Constructed
by
Wm. Cramp & Sons.
Phila. Pa.

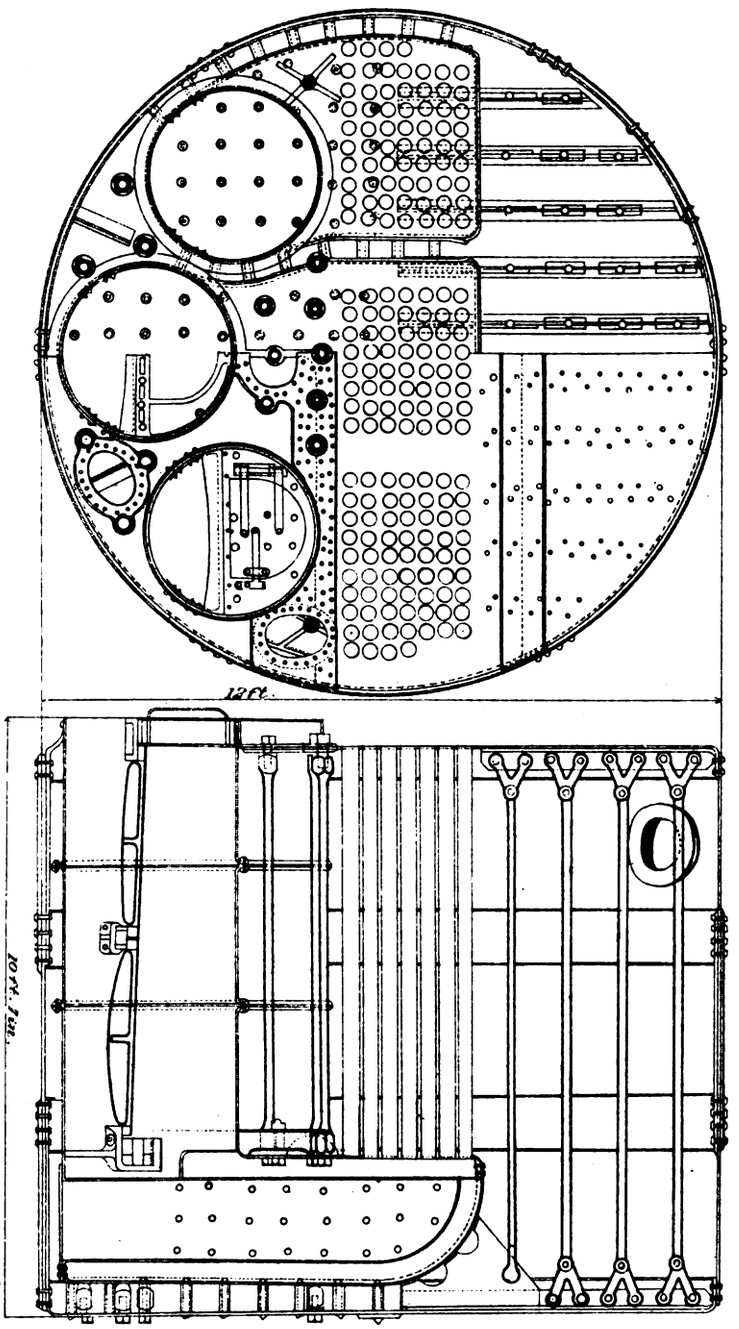

Digitized by Google

Digitized by Google

Engines of the Steamships Pennsylvania, Ohio, Indiana and Illinois. of the American Steamship Co. of Philada.

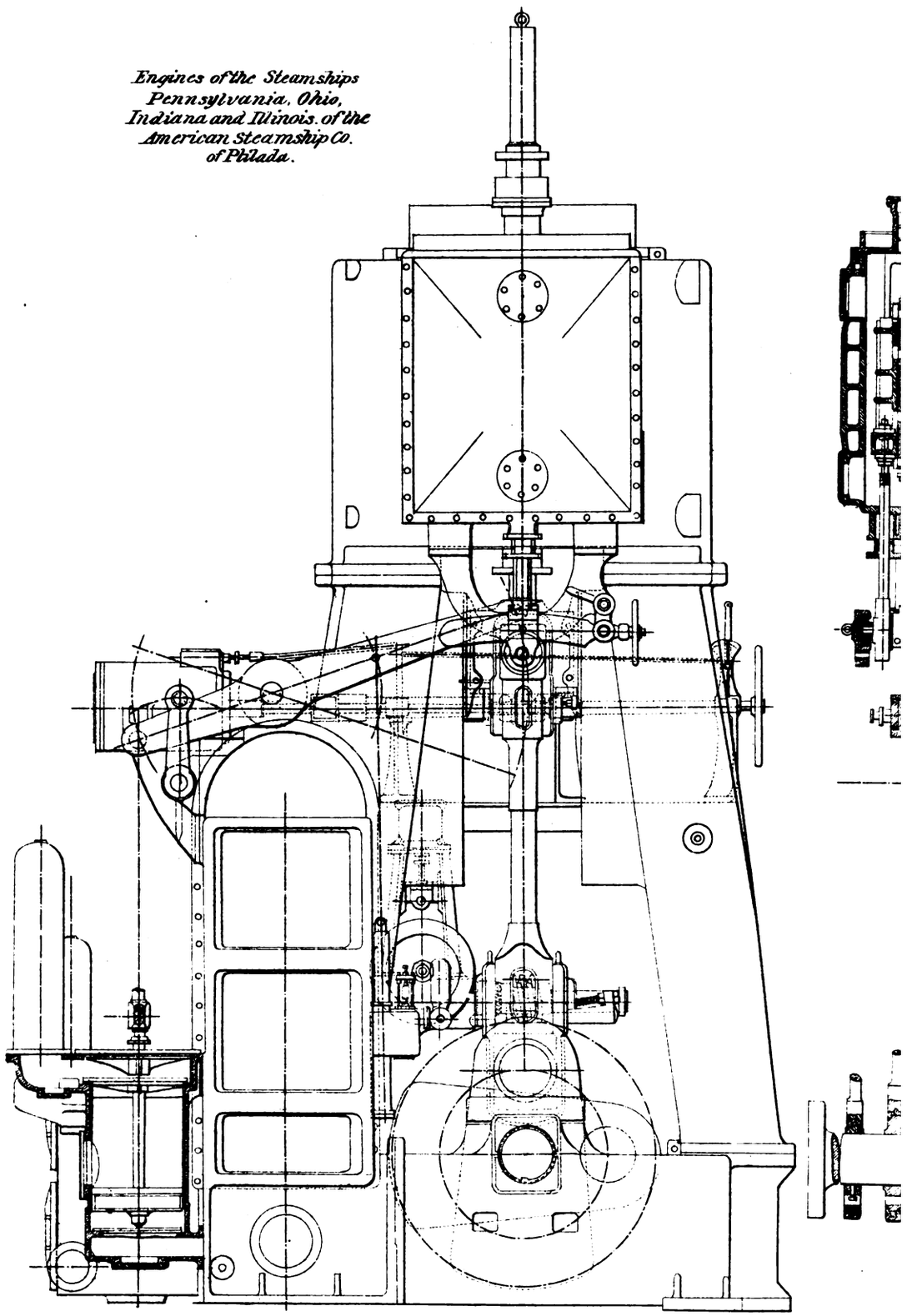

Digitized by Google

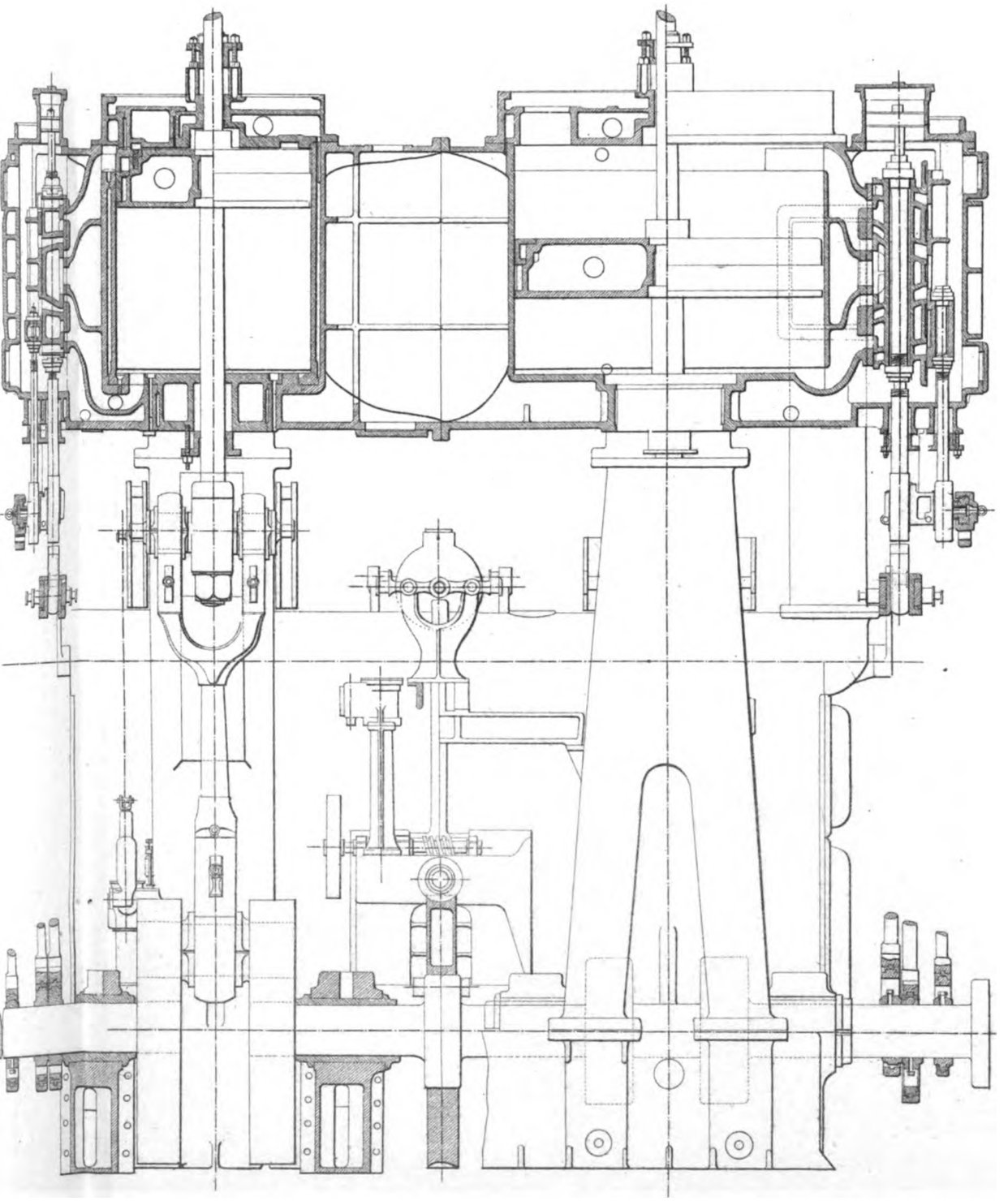

Digitized by Google

Digitized by Google

CHAPTER XVI.

ENGINES OF THE AMERICAN STEAMSHIP LINE. (PLATE XX.)

THE hulls and engines of the American Steamship Company's four vessels—the *Pennsylvania*, *Ohio*, *Indiana*, and *Illinois*—were designed and built by the W. Cramp and Sons' Ship and Engine Building Company, Philadelphia, and are all of the same model and plan.

The *Pennsylvania* commenced running between Philadelphia and Liverpool in May, 1873, and was followed by the *Ohio* in August, the *Indiana* in October following, and by the *Illinois* in January, 1874, since which time all have been regularly engaged upon the same route. The vessels are 355 feet long over all, 43 feet moulded breadth, and hold moulded 33 feet 6 inches. Their gross tonnage is 3,030 tons.

The engines (Plate XX.) are compound, and surface-condensing, with the crank set at right angles. The cylinders are 57¼ inches and 90⅛ inches in diameter, respectively, and the stroke of the piston is 4 feet. The main slide-valves are on the outside of the high- and low-pressure cylinders, which are both enclosed in a jacket connecting them together, and forming a receiver. The high-pressure cylinder is also steam-jacketed, but the low-pressure cylinder is not. The pistons are 16¾ inches deep; the rod for the high-pressure cylinder is 8 inches, and that of the low-pressure 8½ inches in diameter, and both are carried upwards through the cylinder heads. The crossheads are of wrought iron, with cast-iron slides bolted to their ends. The main slide-valves have double ports; each is fitted with an independent cut-off-valve on the back, no provision being made for counterbalancing the pressure on the valve faces. The weight of the main valves is counterbalanced by the steam-pressure in a cylinder on the top of the steam-chest. Both main valves are driven by motion of the double-bar link type.

The engines are reversed by direct-acting steam-gear, the reversing cylinder being 20 inches in diameter, with a slide-valve on top, which is thrown open by hand, and closed by the motion of the piston-rod in any position. A screw is also provided

Digitized by Google

which can be clamped to the piston-rod of the cylinder so as to move the links by hand if there is a want of steam.

Relief-valves are fitted at the end of each cylinder, with gear to use them as starting-valves. The connecting-rods are forked at the crossheads and are fitted with strap ends. The crosshead journals are 10½ inches in diameter, 10½ inches long, and the crank-pins are of steel 15½ inches in diameter and 20 inches in length. The crank-shafts are built up in two lengths, and are made interchangeable; the main journals are 15½ inches in diameter and 30 inches long, except the forward journal, which is 24 inches long. The cranks are counterbalanced.

The bed-plate is made in two parts, and is bolted up to the condenser. This latter is in two pieces, and contains 1,492 tubes, ⅞ inch in diameter and 14 feet long, the surface exposed being thus 4,786 square feet. The water from one circulating-pump passes through them three times, and from the other twice. The pumps are worked from the main crossheads through wrought-iron levers, as shown. Each air and circulating-pump is cast separately and bolted to the condenser. A feed and a bilge-pump are bolted to each air-pump. The latter are 26 inches in diameter, the cirulating-pumps are 18 inches in diameter, and the feed and bilge-pumps are each 6 inches. The stroke of all is 26 inches.

Indicator diagrams were taken from the engines of the *Ohio* during her second run, and under the following conditions:

Pressure of steam in boilers	60 lb.
" " receiver	1.5 "
Vacuum in condenser	25.5 in.
Revolutions of engines per minute	60
Temperature of water in hot well	130°
Steam cut-off at 19 inches in the high-pressure cylinder	
Indicated horse-power in high-pressure cylinder	1237.44
Indicated horse-power in low-pressure cylinder	740.1
Total I. H. P.	1977.54

Digitized by Google

The running of the *Ohio* during the voyage from Queenstown to Cape Henlopen, when the above mentioned diagrams were taken, was as follows:

Date.	Knots Run by Screw.	Knots Run by Observation.	Running Time.	
1873.			hours, min.	
Oct. 17.	246.8	226.0	18 59	
" 18.	323.8	280.7	24 23	
" 19.	338.5	322.0	24 15	
" 20.	335.7	294.0	24 23	
" 21.	331.0	No observation.	24 0	15 min. detention.
" 22.	341.5	No observation.	24 24	
" 23.	336.7	946 in 3 days.	23 43	18 min. detention.
" 24.	339.5	333.7	24 22	
" 25.	343.2	321.0	24 21	
" 26.	142.0	140.0	10 30	
	3078.5	2863.4	9 days, 7 hours, 20 minutes.	

The slip of the screw amounted to 215.3 knots, or 6.8 per cent., while the average speed was 12.8 knots. The weather was calm.

That the performance of the engines has been most satisfactory is proved by the great regularity of the passages made by the vessels to which they are fitted while their workmanship and general finish well deserve praise.

Digitized by Google

CHAPTER XVII.

COMPOUND ENGINE OF U. S. LIGHTHOUSE STEAMER "MANZANITA," DESIGNED AND CONSTRUCTED BY H. A. RAMSAY & CO., BALTIMORE, MD.

THE Plate (XXI.) shows a compound engine by the above well-known firm of builders. In design and construction it is very similar to those by Mr. John H. Dialogue, of Camden, N. J., who has a fine reputation as the designer and constructor of some of the best and most efficient compound engines in this country. The cylinders, which are 24″ by 38″ by 27″ stroke, are supported by four columns, two on the starboard side extending up from the bed-plate, and the two on the port side being cast on the surface condenser. The guides are of the well known "slipper-slide" variety, which renders access to the crosshead and stuffing boxes very easy. The cranks are built up of wrought-iron slabs with steel crank-pins. The cranks are placed on a line or 180° apart; by this arrangement no "receiver" is required and the high-pressure cylinder exhausts directly into the low-pressure cylinder.

The bed-plate is of the box-girder order, the sides are well kept up toward the centre of the shaft to permit the use of long longitudinal keelsons of wood, to distribute the weight over as much surface as possible on the bottom of the hull, the transverse piston being deepened under the bearings sufficiently to safely transfer the weight to the keelsons, and the thrusts of the working parts to the side supports of cylinders.

The air, circulating, and feed-pumps, are worked by levers from the low-pressure cylinder crosshead; they are all of the usual construction, and do not need any special description.

The surface condenser contains 895 square feet of cooling surface, there being 781 tubes $\frac{5}{8}$ inch in diameter, and 7 feet long between the tube sheets. The tubes are made tight with wood packing.

The bearings for all the journals are large, and such a thing as a hot box is unknown. The following are some of the dimensions:

Crosshead journal, 5 inches diameter and 8 inches long; crank-pin, 7½ inches

Digitized by Google

Digitized by Google

Compound Engine
of the
U.S. Light House Steamer
"Manzanita."
Designed & Constructed by
H.A. Ramsay & Co.
Baltimore, Md.

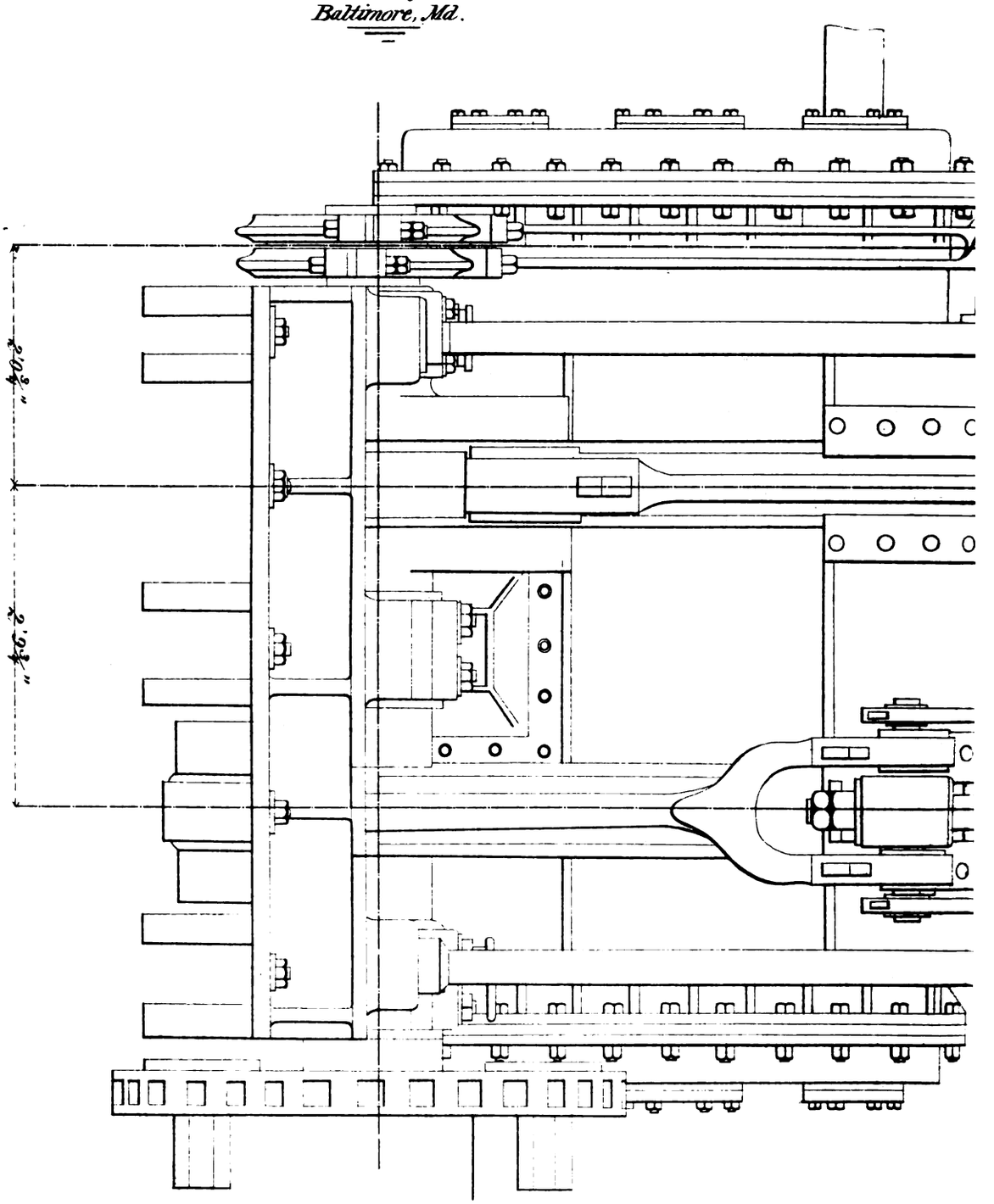

Digitized by Google

Plate XXI

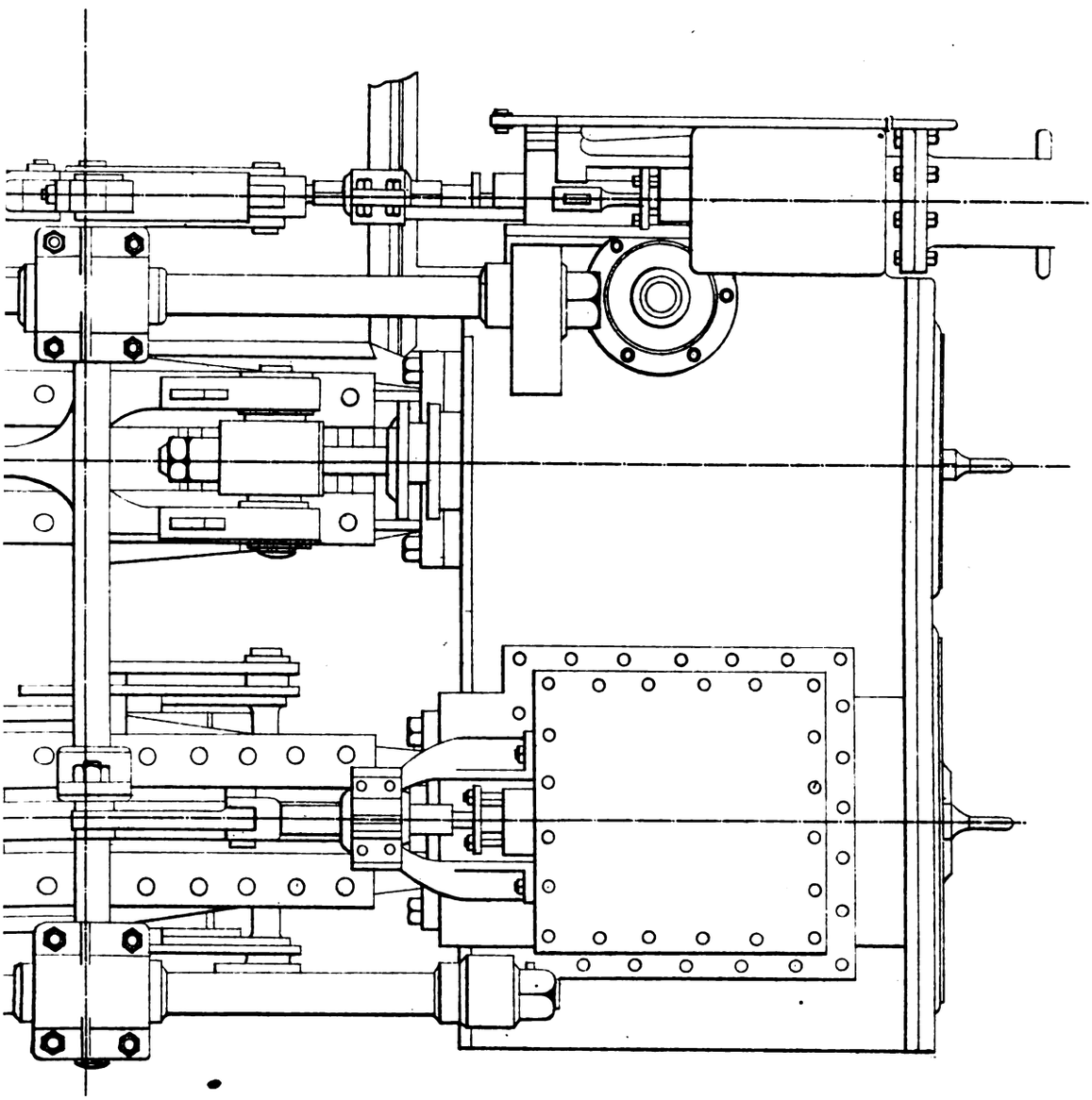

Digitized by Google

Digitized by Google

diameter and 9 inches long. Each slide measures 7½ by 10 inches at right angles to direction of pressure. The main journals are all 9 inches diameter, and 10 inches, 20 inches, and 12 inches, respectively, in length.

The valves are of the ordinary three-ported kind, and the steam is cut-off by means of lap upon the same; there is no independent cut-off valve.

That this vessel has proven a success there can be no doubt, both as a good sea boat and as to speed. It will be seen from her log that she was never worked up to her maximum speed, which is from 80 to 85 revolutions. With the wind ahead for four days (including a cyclone), she averaged 160 knots per day. With the wind abeam, twelve days, she averaged 208⅝ knots; and astern, five days, the average was 214 knots per day. She made, in the run to Bahia, 4,215 knots = 4,853.6 miles in 21 days, an average of 231.13 miles per day, or 9.63 miles per hour, consuming in that time 161 tons of coal, or an average of only 7¾ tons per day. She made the run from New York to San Francisco in 64 days.

Log of the "Manzanita."—From New York to Bahia, Brazil, on her way to California.

Date.	Days out.	Total Distance.	Daily Distance.	Coal. Tons.	Mean Revolutions.	True Course.	Winds.		Sea.	
							Dir.	For.	Dir.	Stat.
Oct. 27	1	235	235	7½	70	SE. ¾ E.	SW.	2	.....	sm.
" 28	2	426	191	7¼	64	SE. by E. ½ E.	South	5	ENE.	R
" 29	3	426	cycl.	5	41½	Cyclone.	se t nw*	11	Cycl.	H
" 30	4	594	168	7¾	63	E. by S. ½ S.	NW.	8	NW.	H
" 31	5	807	213	7½	66½	SE. by E.	South	4	East	R
Nov. 1	6	1022	215	7½	63¾	SE. ½ S.	NE.	4	NE.	M
" 2	7	1224	202	7¾	65¾	SE. ¾ S.	ENE.	4	NE.	R
" 3	8	1441	217	7½	65½	SE. ¼ E.	NE.	5	NE.	M
" 4	9	1625	184	7½	65¼	SE.	ESE.	3	East	R
" 5	10	1845	220	7¾	66⅙	SE. by S.	ENE.	5	East	L
" 6	11	2065	220	8	66	SE. by S.	ENE.	5	East	L
" 7	12	2275	210	8	66	SE. ½ S.	East	4	East	L
" 8	13	2491	216	8	66	SE. ¼ E.	East	4	East	M
" 9	14	2698	207	8	65⅓	SE. ¾ E.	ENE.	3to7	ESE.	M
" 10	15	2899	201	8	67⅓	SE. by S.	ESE.	4	ESE.	M
" 11	16	3083	184	8	66⅙	SE. by S.	ESE.	3to7	ESE.	R
" 12	17	3297	214	8	67⅚	S. by W.	ESE.	4	ESE.	M
" 13	18	3517	220	8	68½	S. ¼ E.	ESE.	5	ESE.	M
" 14	19	3745	228	8	69⅚	S. ¾ W.	ESE.	5	ESE.	M
" 15	20	3990	245	8	70½	SSW. ¼ W.	NE.	4	NE.	M
" 16	21	4215	225	8	68½	SW.	NE.	3	NE.	S

*Bar. 29.10.

Digitized by Google

CHAPTER XVIII.

COMPOUND ENGINES, BOILERS, AND SCREW PROPELLERS, (PLATES XXII., XXXIII., XXIV., XXV.), FOR U. S. SLOOPS OF WAR. DESIGNED AND CONSTRUCTED BY THE BUREAU OF STEAM ENGINEERING, U. S. NAVY DEPARTMENT.

THESE engines which are of the return connecting-rod type, are placed immediately aft of the boilers, the shaft having an inclination at about 1 in 31. The machinery occupies a space of about 16 feet in length. There are in all eight multi-tubular boilers, four placed on each side of the vessel, the fire-room (8 feet wide) running fore and aft between them. They occupy altogether a length of 40 feet, so that the total distance between bulkheads is about 56 feet; the distance from the centre of the engines to the stern-post is 62 feet 8 inchēs. Between the crank-shaft and the propeller shaft there is only one intermediate shaft, which has three bearings. The thrust bearing is placed on the propeller shaft, just forward of the stern tube. Each set of four boilers has a common uptake, the two uptakes uniting and forming the base of a single telescopic chimney.

The design is a somewhat peculiar one. The low-pressure cylinder has two piston rods crossing the shaft and a return connecting rod in the usual way. In the high-pressure cylinder, however, there was not room for the two rods, and the piston carries a central rod only. This rod is fitted with a crosshead made so as just to clear the crank when at the front of its stroke. This crosshead is placed obliquely, and is guided in the framing at both ends. It is connected with a crosshead of the usual construction by a pair of rods, and from this second crosshead the shaft is driven. The arrangement permits a longer stroke to be used with a given capacity of cylinder than would otherwise be possible; it seems open to serious question, however, whether it would not have been wiser to use cylinders of larger diameter and less stroke, so that both might have been driven in the usual manner, and the intermediate crosshead, with its guides, etc., rendered unnecessary.

Both high and low-pressure cylinders are steam-jacketed and fitted with expansion valves. They are enclosed in a casing which serves as an intermediate receiver. The valve chests are large castings bolted to the sides of the cylinders and extended

Digitized by Google

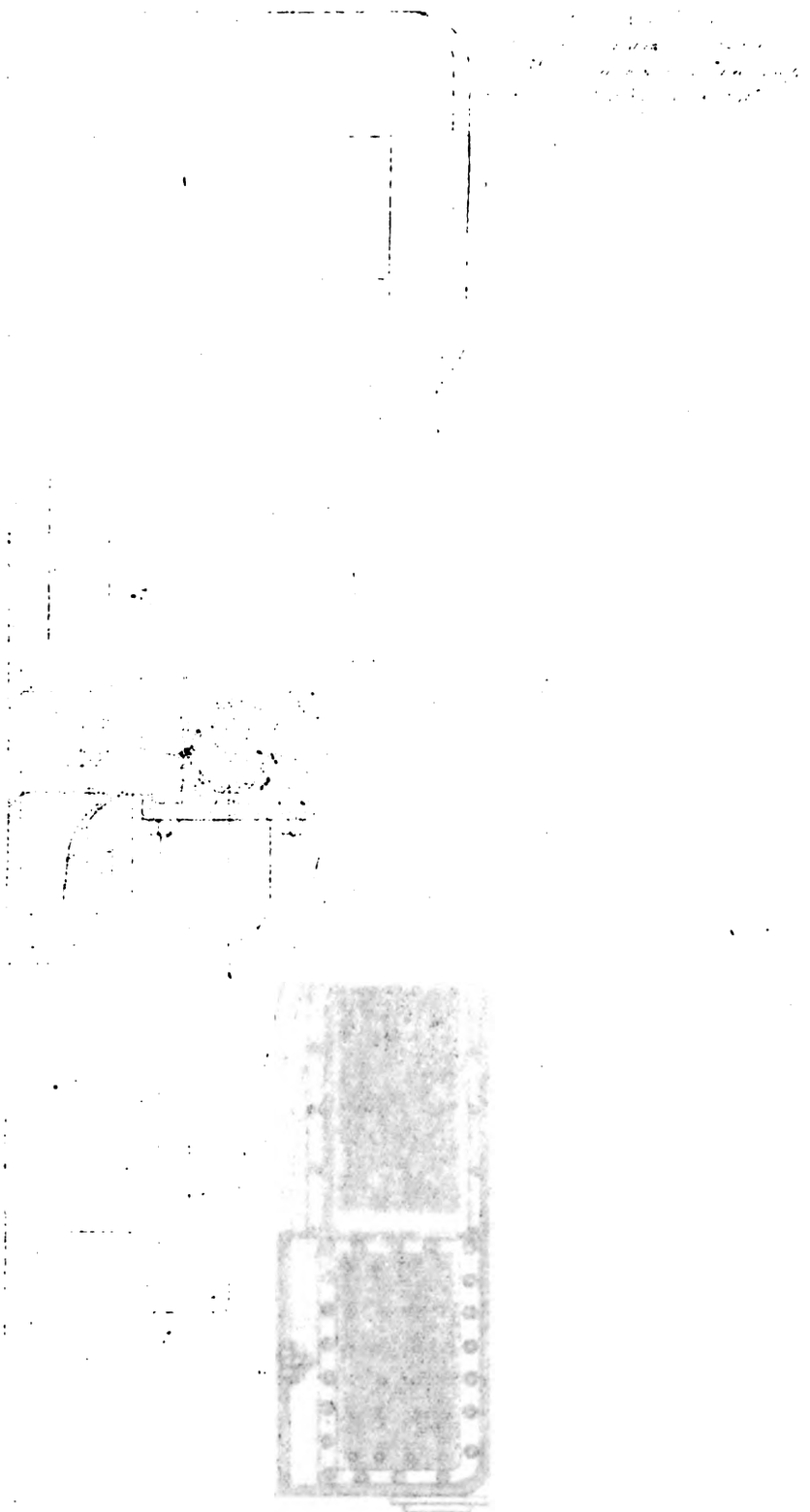

Digitized by Google

Compound Engines (back acting)
for U.S. Naval Vessels.
Designed & Constructed by
The Bureau of Steam Engineering
U.S. Navy Departm.t

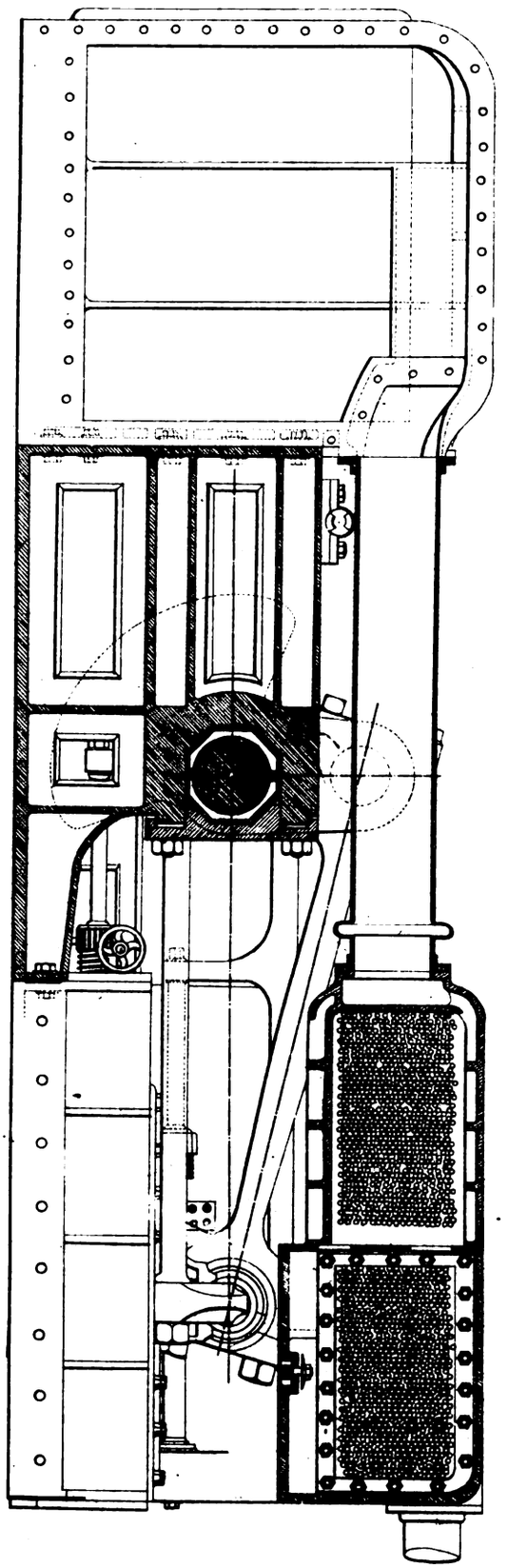

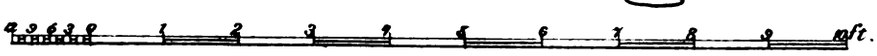

F Bourquin Lith. Phila

Digitized by Google

Digitized by Google

Digitized by Google

Plate XXIII

Compound Engines (back acting) for U.S. Naval Vessels, Designed & Constructed by the Bureau of Steam Engineering U.S. Navy Dept.mt

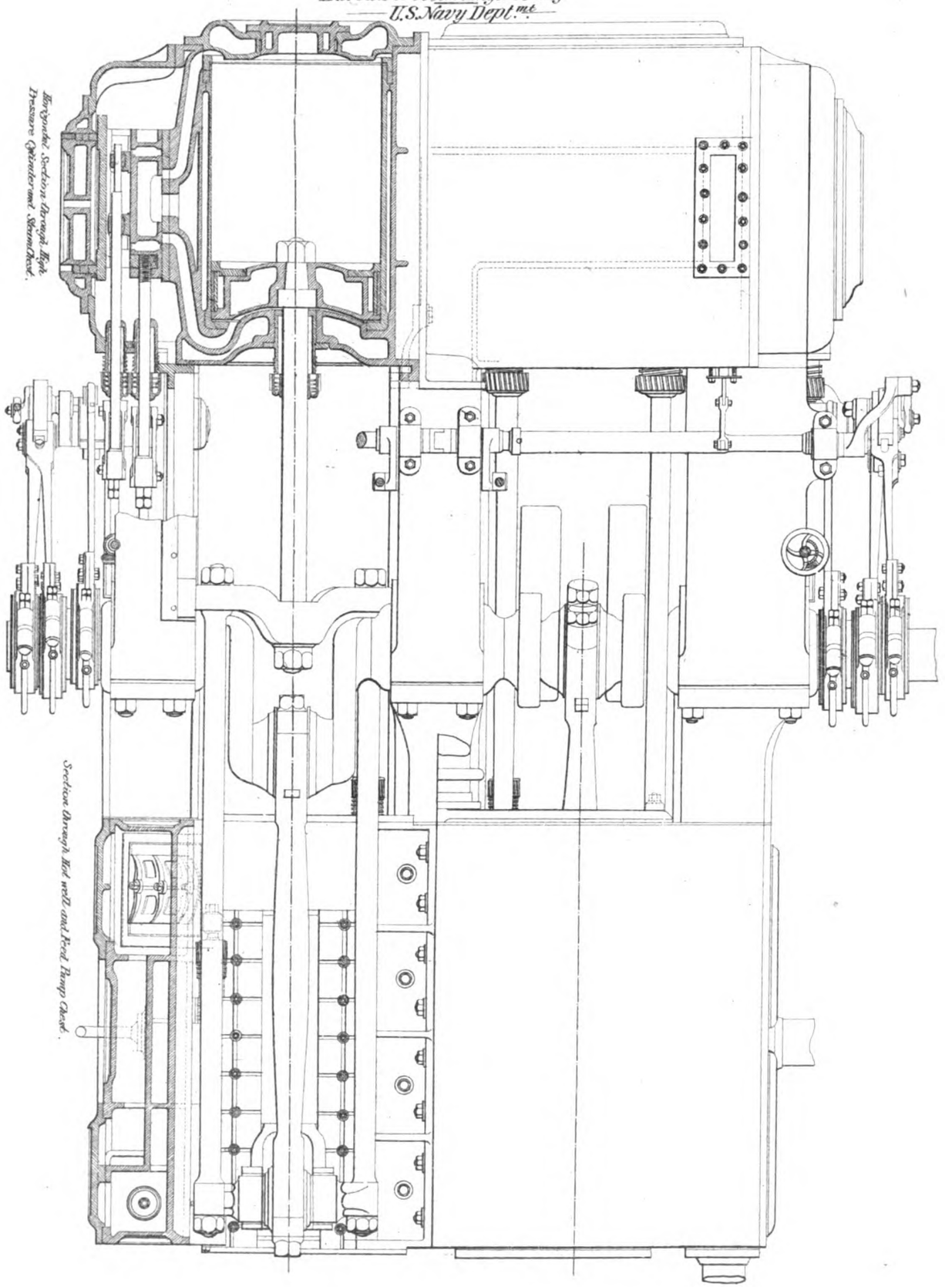

F Bourquin Lith Phila

Digitized by Google

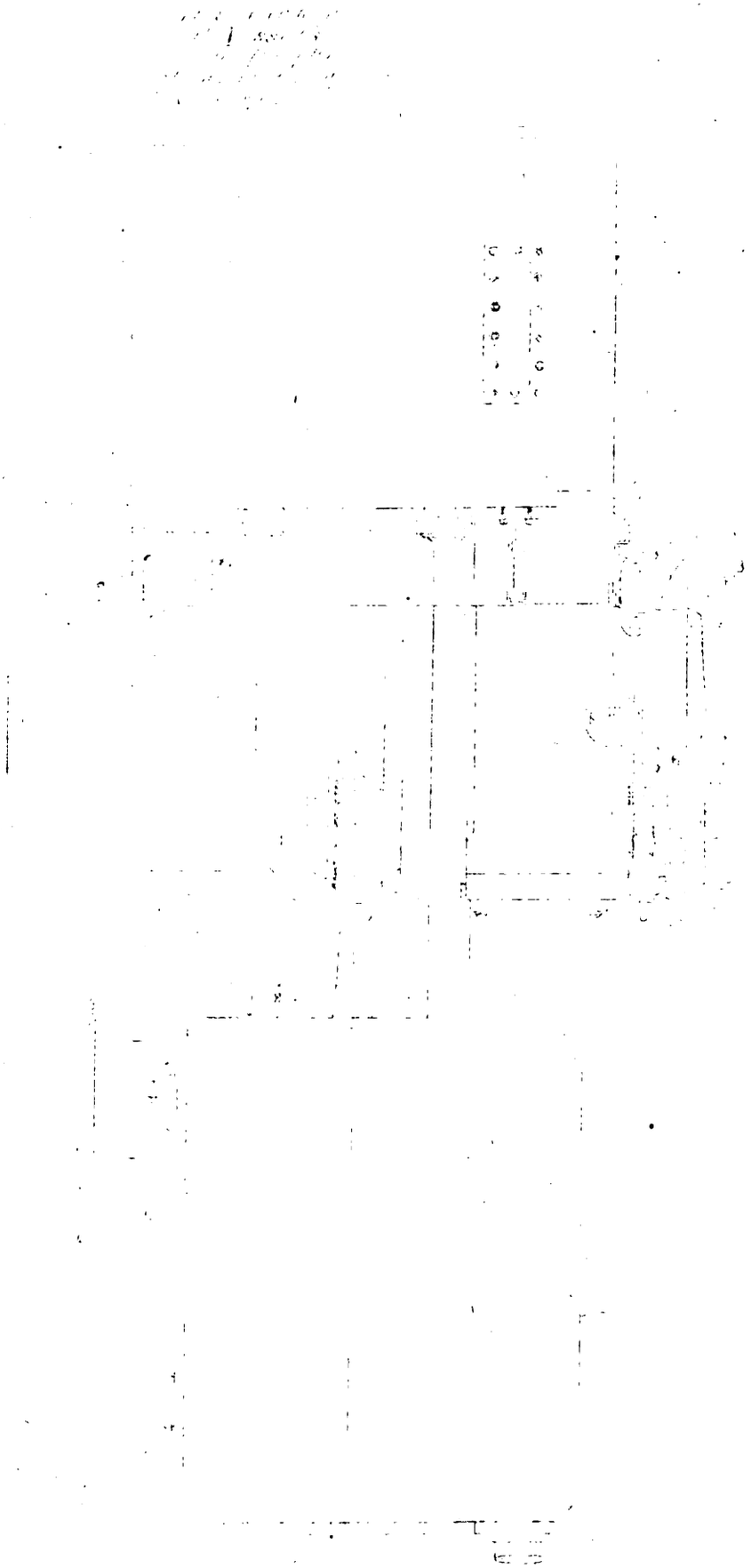

Digitized by Google

downwards so as to rest on the timbers. These castings are also bolted directly along with the cylinders, to the framing. The frames are open, they have single webs and broad cross feathers.

The two forward bearings are of the same length; the after bearing, however, is somewhat longer, and the after frame a good deal stiffer than the others.

The surface condenser and pumps are placed on the port side of the vessel. The tubes are horizontal and placed fore and aft, the condenser itself being a rectangular chamber carried right over the main crossheads and clear of them, supported only at the two ends. The casting which forms the guide for the high-pressure crosshead contains also the air-pump with its valve chambers and the hot well, and carries the forward end of the condenser. Similarly the casting which forms the guide for the low-pressure crosshead contains the circulating pump, and supports the after end of the condenser.

The starting platform is level with the top of the cylinders. There is steam starting and reversing gear, which we shall afterwards notice more fully, and in addition to this, separate hand starting valves are provided for both cylinders.

The high-pressure cylinder is 34 inches in diameter by 42 inches stroke, and is made $1\frac{1}{8}$ inches thick, the intended initial pressure of steam being 80 lb. per square inch. It will be seen from the engravings that the working barrel is made in a separate casting. It is bolted to the main casting at the front end, and made tight at the other end by packing, the packing ring being pressed up by set screws made long enough to be pressed by the cylinder cover when it is bolted up. The space left between the liner and the main casting is $\frac{5}{8}$ inch all round, and this is used as a jacket. The main casting is one inch thick, and is strengthened by a couple of ribs. The high-pressure cylinder is single ported, the area of each port being $\frac{1}{12.2}$ that of the cylinder, and the volume of one port plus the clearance being equal to about 2.7 inch of the stroke, or, say, $\frac{1}{16}$ the whole capacity of the cylinder. The area of the main steam pipe is about $\frac{1}{14.2}$ that of the cylinder, the maximum opening of the valve being $\frac{1}{19.5}$ the area of the cylinder. The main valve works upon a separate face, secured to the main casting by screws. The exhaust from the high-pressure cylinder passes into the chamber which surrounds it and partly surrounds the low-pressure cylinder also. The capacity of the chamber is about 73 cubic feet, or 3.3 times the capacity of the high-pressure cylinder.

The low-pressure cylinder is 51 inches in diameter, the ratio of areas of the cylin-

Digitized by Google

ders being thus only 2.25. In general construction it is similar to the cylinder already described. The liner is $1\frac{1}{4}$ inches thick, the main casting being still one inch the space for jacket being $\frac{3}{4}$ inch. The cylinder is double ported, the port area being $\frac{1}{16.6}$ that of the cylinder, and the volume of the port and clearance being about $\frac{1}{19}$ of that swept through per stroke by the piston, or equal to 2.2 inches of stroke. The maximum opening of the valve is also about $\frac{1}{16.6}$ of the area of the piston. Both cylinders are, as already mentioned, fitted with starting valves.

The main valves are of very much the usual construction, the ports being carried through to the back. The sides are prolonged above the expansion valves for the purpose of attaching to them a balance plate. It should be mentioned that the details of this arrangement, and of some others, are shown a little differently in the general views and in the detailed drawings. The expansion valves act as simple slides the space between which can be altered by a right-and-left-handed screw cut on the spindle. The cut-off can be altered when the engines are at work by means of the small hand-wheel and bevel gearing shown at the forward end of the engines. One of the two slides is made as a frame, sliding within the main slide, the other is a plain slide and is guided within the frame of the first. The main valve has $\frac{5}{16}$ inch inside lap at each end, $1\frac{5}{16}$ inches outside lap at the front, and $\frac{1}{16}$ inch at the back end.

The main and expansion valves for the low-pressure cylinder are very similar in design to those of the high-pressure cylinder, the principal difference being that they are double-ported. The main valve is made with $1\frac{1}{16}$ inches inside lap at each end, $\frac{3}{4}$ inch outside lap behind, and one inch in front.

The pistons are packed with springs in a way not greatly differing from ordinary practice. They are made up solid on the under side, however, for a much greater distance ($\frac{1}{3}$ circumference) than usual. The pistons are made of exceptionally thin metal ($\frac{1}{2}$ inch), and to make up the strength of the larger one it is stiffened by a network of feathers. The disadvantages of such a construction are obvious enough—what is to be gained by it does not appear. The high-pressure piston is also stiffened in an extraordinary way by cylindric struts cast across it. It does not appear that in either case the metal is disposed in the most advantageous way. The piston rods are secured also in a way which is not likely to be imitated, viz., by the use of a nut on each side of the piston The thread on the end of the rod is not, of course, cut as shown in the drawings, so large that the rod cannot pass through the piston.

Digitized by Google

Digitized by Google

Screw Propellers.
for U.S. Naval Steamers.
Designed and Constructed by the Bureau of Steam Engineering, U.S. Navy Departm.t

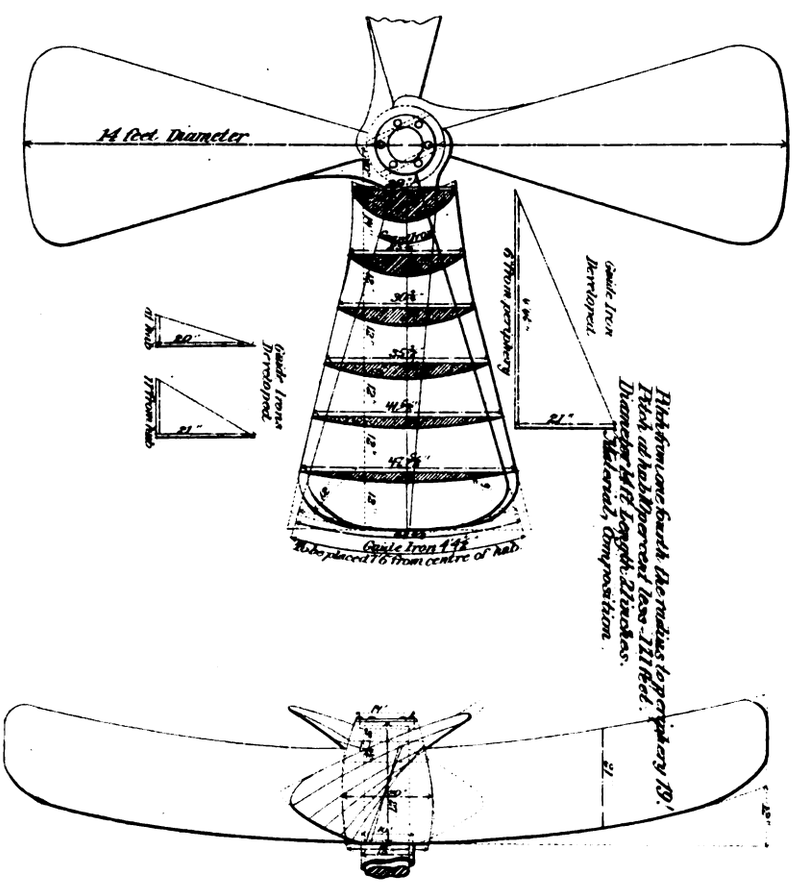

F Bourquin lith. Phila

UNIV. OF MICH.
Digitized by Google

Perhaps this arrangement is intended to serve as a means of compensating for the shortening of the connecting rod by wear, but surely this could be more easily done if necessary at the other end of the rods than at the pistons. The construction adopted is not only very expensive, but weakens the piston (by the reduction of its depth) to an extent which perhaps the designers have not realized.

The design of the main crosshead and guides is somewhat unusual. The crosshead itself is a forging (its form is shown in Plate XXIII.) having a bearing 7 inches in diameter by 11 inches long for the connecting rod. On each side of this journal are heavy collars which are flattened underneath and attached by set screws to a large cast-iron step, on the lower side of which is fixed a composition slipper, working on the guides. Both crank-pins are 10 inches in diameter by 16 inches long. The high-pressure crank webs are made comparatively thin (5 inches), and very deep in the centre, their end elevation being made oval for reasons no doubt known to their designers, but which do not suggest themselves in connection with the distribution of stress which usually occurs in a crank. The throws for the low-pressure crank are made separate from the shaft, and keyed on to it, a balance-weight being made in one piece with each throw. The connecting rods are also shown in Plate XXIII. Their length is 90 inches (about $4\frac{1}{2}$ cranks.) Each head is bored out on both sides to receive the brasses, which are turned. In the middle part (in width) of each head the brasses have flat sides, in order to make more room for the bolts. The latter are 3-inch collar studs tapped into the metal of the heads.

The steam starting and reversing gear is simple in construction, and likely, we should think, to work well. The starting cylinder is vertical, 12 inches in diameter and 10 inches stroke. It has a hollow piston rod, to the upper end of which is secured a crosshead for working the gear by side rods. The piston rod is screwed internally at the top, and forms a nut for a vertical spindle, upon which is secured the horizontal starting wheel. By means of a three-way cock, steam can be admitted to either end of the cylinder through small ports having an area of about three-quarters of a square inch. The steam pressure is thus made to balance the weight of the gear, so that the whole can be very easily worked by hand. The cylinder exhausts into the main exhaust pipe.

The screw-propeller (Plate XXV.) is a four-bladed propeller, 14 feet in diameter and 21 inches long, and has a pitch varying from 19 feet at tip of blades to 17.1 feet (10 per cent. less) at hub. The ratio of mean pitch to diameter is therefore

Digitized by Google

very closely 1.3. The projected area of each blade is about 13 square feet, and the actual area about 21 square feet. The ratio of the whole projected area of the propeller to the area of a disc of the same diameter is almost exactly 1 to 3.

Plate XXIV. shows the construction of one of the boilers, of which it will be remembered there are eight in all. Each boiler is 8 feet in diameter and 8 feet long, and contains about 600 square feet of heating surface. It contains only one furnace, which is 4 feet 6 inches in diameter, and which has a grate surface of 24 square feet. The furnace is strengthened by two flanged seams. The shell joints are all double-riveted, all except the end rings being butt joints with a single cover plate, and the longitudinal joints in the furnace are made in the same way. The mode adopted for fixing the stays differs a good deal from common practice. Riveted stays with ferrules are used for the flat surfaces at the back of the boiler, and the longitudinal stays are made with tapped bosses at each end, into which bolts are screwed from without. The end plates are stiffened by cross pieces along each line of stays.

Remarks.—Some of these engines have been thoroughly tested at sea, and their performance has been most satisfactory. In design and construction they represent the latest and most advanced American practice in marine engineering. In the Engineer Corps of the Navy, there are to be found many talented and skillful engineers who shed lustre upon the profession and the service, and who only need an opportunity to show the nation that they can design and construct marine engines equal to any designed and constructed elsewhere in this country, or in Europe. Some of the most talented of our American engineers now in civil life, notably Copeland, Emery, Thurston, Leavett, Newton, Archbold, Haswell, and others, were formerly engineers in the Navy.

Digitized by Google

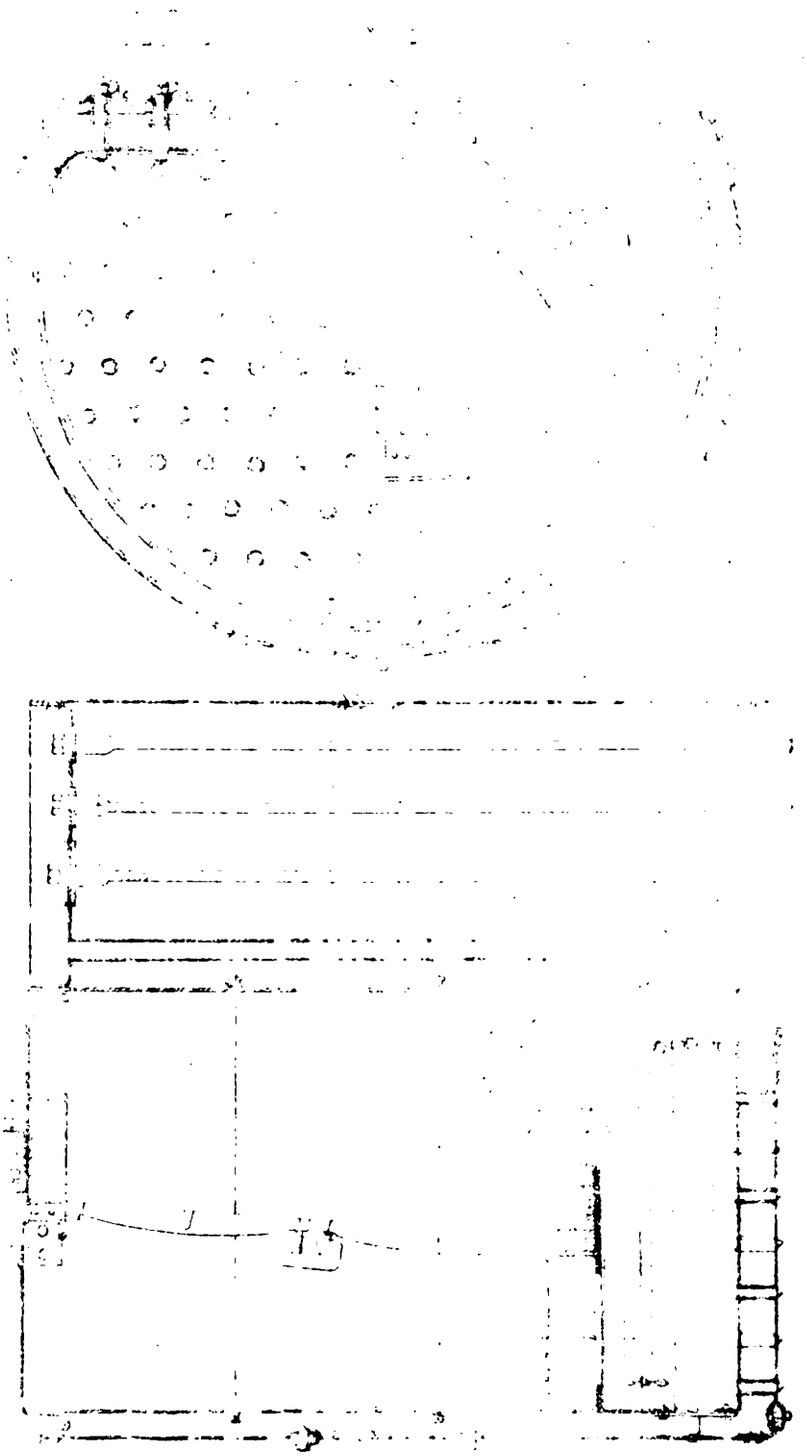

Digitized by Google

13 square feet, and the
projected [illegible] of the
most exactly [illegible].
boilers, of [illegible] it will be
[illegible] feet in [illegible] and 8 feet
[illegible] surface [illegible] ans only one
[illegible] which [illegible] surface of 24
[illegible] flan[illegible] The shell joints
[illegible] [illegible] ith a single cover
[illegible] [illegible] same way. The
[illegible] common practice.
[illegible] back of the boiler,
[illegible] end, into which
[illegible] by cross pieces along

[illegible]ly tested at sea, and their
[illegible] construction they represent
[illegible] marine engineering. In the
[illegible] many talented and skillful
[illegible] service, and who only need
[illegible] design and construct marine
[illegible] elsewhere in this country, or in
[illegible] American engineers now in civil life,
[illegible]ett, Newton, Archbold, Haswell and
[illegible]vy.

Digitized by Google

Marine Boilers
for U.S. Naval Steamers.
Designed & constructed by the
Bureau of Steam Engineering,
U.S Navy Department.

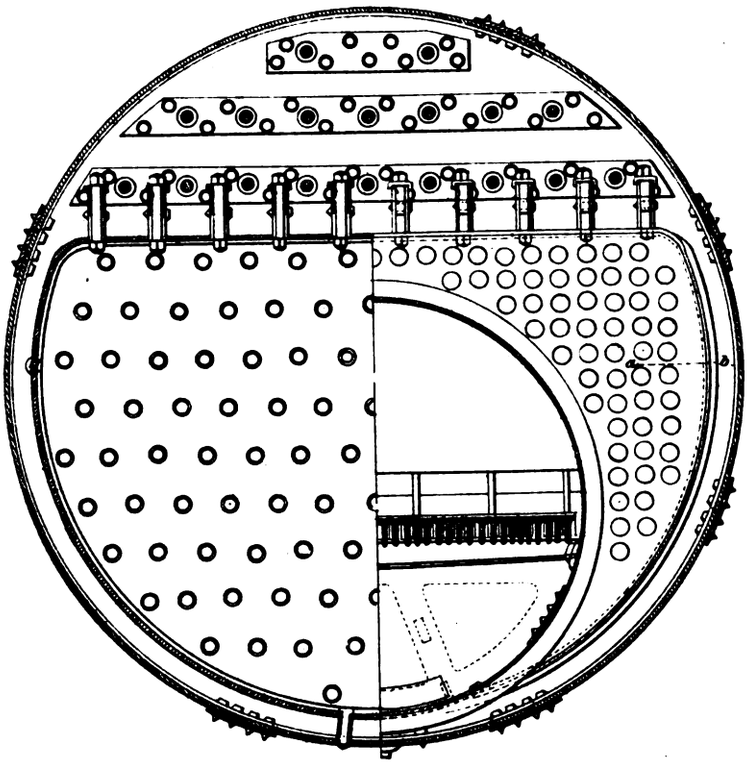

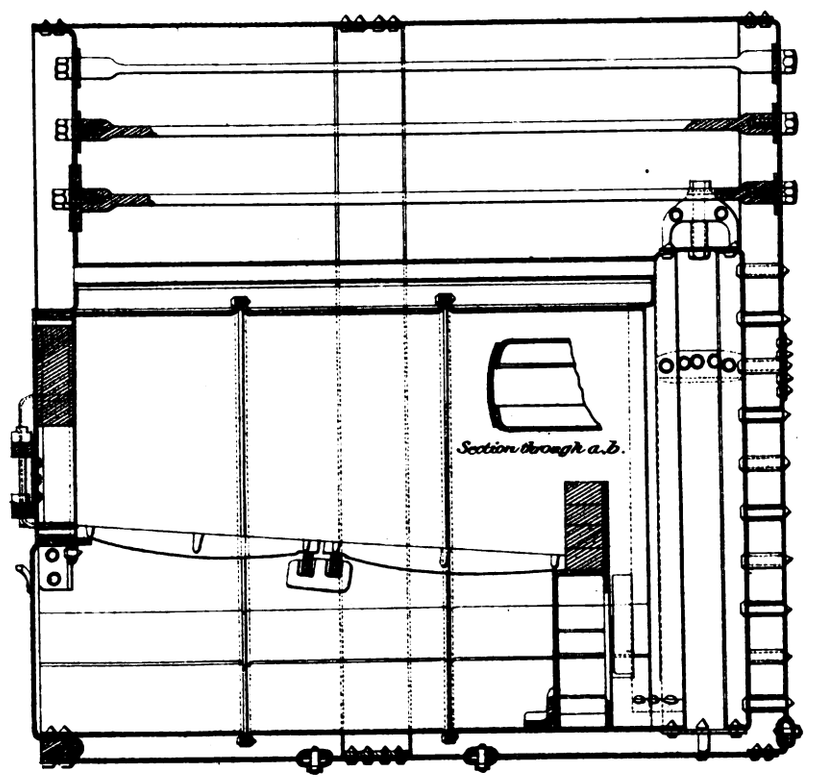

F Bourquin Lith Phila

Digitized by Google

Digitized by Google

Digitized by Google

PLATE XXVI.

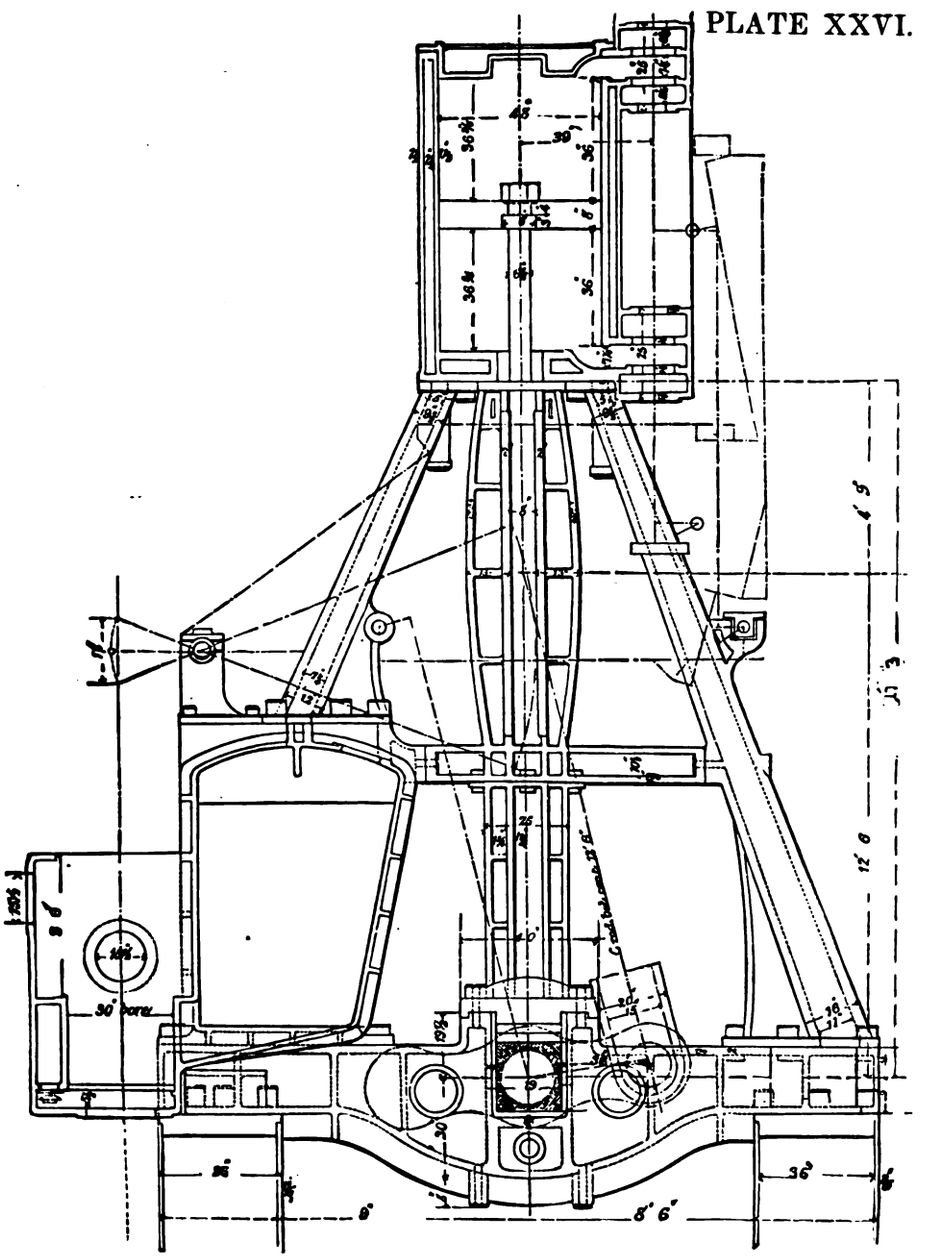

ENGINES OF THE S. S. "HUDSON."

Digitized by Google

Digitized by Google

PLATE V[illegible] VI

Digitized by Google

CHAPTER XIX.

ENGINE OF THE STEAMSHIP "HUDSON," BUILT BY MESSRS. PUSEY, JONES & CO., WILMINGTON, DELAWARE.

FOR some years a line—known as the Cromwell line—of steamers has been running regularly from New York to New Orleans, a distance, in round numbers, of about 1,800 knots. The engines (Plate XXVI.) of these steamers have, therefore, to work day and night for considerable periods. Three of the vessels are known as the *New Orleans*, *Knickerbocker*, and *Hudson*. We shall confine our attention to the most recently built of the three, viz., the *Hudson*. She is an exceedingly handsome type of sea-going screw steamers, and it will be granted, we think, that if machinery of a given kind is successfully used to propel her, it may be used with equal success in the case of other ships. In a word, an experiment conducted to a successful issue on board such a ship as the *Hudson*, carries a weight which it would not possess if the ship and her engine were smaller, or made shorter voyages in less tempestuous seas.

The *Hudson* is propelled by one single cylinder surface-condensing engine, with an overhead inverted cylinder, the stroke being 6 feet, and the diameter of the piston 48 inches. The working pressure is 90 pounds absolute, or 75 pounds safety-valve load. There is no fly-wheel, but the weight of the crank, etc., is counterbalanced by a back-crank, as shown. The valve-gear is very peculiar. It will suffice to say that steam is admitted to and exhausted from the cylinder by four independent double-beat-poppet valves, worked by wipers on rocking shafts, and cams on the crank-shaft. It was deemed expedient to get the sharpest possible admission and cut-off, and 90 pounds of steam is thrown on this 48-inch piston at each stroke in a fraction of a second of time, while the cut-off is literally as quick as lightning, and quite different in this respect from anything that can be had with slide-valves. As they are accurately in equilibrio, and provided with dash-pots, the valve-gear, complex as it appears, works in silence and without jar or vibration. In going into or out of port full steam is carried almost throughout the entire stroke, the throttle-valve being almost closed. The engine never

Digitized by Google

sticks on the centre, and is handled with the utmost ease by a couple of men, notwithstanding its great size. Steam is in regular work cut off at from one-twelfth to one-fifteenth of the stroke. The area of a 48-inch cylinder is 1,810 square inches and the strain brought to bear at the beginning of each stroke on the piston-rod of the *Hudson* is not less than $1{,}810 \times 90 = 162{,}900$ pounds, or over 72 tons. It is difficult to realize the fact that an engine like that of the *Hudson* can work, silently, at 60 revolutions per minute, or 720 feet of piston speed. On this point we cannot do better than quote the following passage from a letter concerning this ship, we have received from Mr. Buchanan Henry:

"Theoretically, most engineers would look for great vibration and unequal motion in an engine suddenly admitting steam of 90 pounds pressure upon the piston, then cutting off abruptly after the piston had only traversed five or six inches in six feet of stroke, and then diminishing the pressure progressively by expansion, until at the end of the stroke the terminal per square inch should not exceed five or six pounds absolute. Many would naturally expect that the hammer-like blow of such high steam upon the piston at the beginning, dying out to nothing at the end of the stroke, would rapidly tend to shake the engine itself to pieces, and strain the ship's hull. The answer is that, in the history of mechanical contrivances, it is often found that theory and practice are not on the most friendly terms. It is notably so in this instance. There is, in fact, less vibration or shake, I can safely say, in the *Hudson's* engine room than in that of any short stroke or compound steamship I have visited, and I have examined a number. Although you may be standing close to the ponderous 12 feet connecting-rod, making nearly 120 strokes per minute, you would hardly think the engine in motion but for seeing the long sweeping stroke, and hearing the clear sharp click of the expansion gear, as there is no sensible shock, jar, or tremor. This may be partly due to good workmanship, but not wholly, as no excellence in this respect would counteract any serious defect in design."

The comparative dimensions and power of these three vessels will be found in the following table:

Digitized by Google

Iron Vessels.	New Orleans.	Knickerbocker.	Hudson.
Indicated horse-power developed	—	780 to 860 H. P.	1,150 to 1,450 H. P.
Registered tonnage	1,440 tons	1,642 tons.	1,783
Length, breadth, depth	253x33x24	260x33½x22	294x34x23
Bulwarks, height	3 ft. 9 in.	3 ft. 9 in.	3 ft. 3 in.
When built and put on route	1872	1873	1874
Displacement with ordinary load	2,244 gross tons	2,519 gross tons	2,950 gross tons
Mean draught, loaded ordinary freight	18 ft.	17 ft.	17 ft.
Engine, Baird's single cylinder, poppet valve, long stroke, expansive	48 diam., 5 ft. stroke	44 diam., 6 ft. stroke	48 diam., 6 ft. stroke
Propeller, true screw	14 ft. diam., 20 P.	14½ ft. diam., 21 P.	15 ft. diam., 22 P.
Boilers, return tubular	Two boilers.	Four boilers.	Four boilers.
Number of furnaces, and length	Ten; 6 ft.	Twelve; 5½ ft.	Twelve; 6 ft.
Width, length, and height	14 ft. 10 in.x12x14	9x12x12.4	9.6x13.8x12.6
Tubes, diameter, and length	536; 3 in.x9 ft.	532; 3½ in.x10 ft.	560; 3½ in.x11.8
Steam chimneys	14 ft. high, 6.6 diameter	12 ft. high, 5.6 diameter	13½; 5.10 diameter
Drums, two; one for two boilers	—	—	—
Pressure of steam above atmosp. and absolute	50 lbs.; 65 absolute	66 lbs.; 71 absolute	75 lbs.; 90 absolute
Point of cutting off	⅛ to ⅛	⅛ to $\frac{1}{11}$	$\frac{1}{12}$ to $\frac{1}{15}$
Vacuum	25 in.	26 in.	26 in.
Temperature of steam	327 deg.	340 deg.	370 deg.
Revolutions per minute, ordinary work	57 to 60	57 to 60	56 to 59
Revolutions, highest number for one watch	70	70	69
Distance from New York to New Orleans, wharf to wharf	1,800 sea knots	—	—
Average trip out, against current	6 days, 10 hours	6 days, 7 hours	6 days, 7 hours
Average trip back, with current	5 days, 17 hours	5 days, 14 hours	5 days, 14 hours
Shortest trip out	6 days, 8 hours	5 days, 20 hours	5 days, 21 hours
Shortest trip back	5 days, 12 hours	5 days, 6 hours	5 days, 10 hours
Greatest run in one day; no wind or current	310 knots	330 knots	335 knots
Coal in twenty-four hours (anthracite)	16 tons	17 tons	19 tons

Digitized by Google

CHAPTER XX.

ENGINES OF THE IRON SIDE-WHEEL STEAMERS "HOLLY" AND "JESSAMINE," BUILT BY MALSTER & REANEY, COLUMBIAN IRON WORKS, BALTIMORE, MD., 1881.

For the United States Light House Board, From the following specifications by Chas. W. Copeland, Esq.

The "Holly" and "Jessamine" are vessels of the following dimensions:

Length from rabbet to rabbet on 4-foot water-line,	146 feet 3 inches.
Breadth of beam, moulded,	23 feet 8 inches.
Breadth from out to out of guard-facings,	39 feet 6 inches.
Depth—top of floors to top of deck-beams,	9 feet 6 inches.
Sheer forward,	2 feet 8 inches.
Sheer aft,	1 foot 2 inches.
Crown of deck in width of hull,	5 inches.
Height of promenade-deck amidships,	7 feet 3 inches.

To have one mast forward for a derrick-mast, and to carry a foresail and staysail.

The deck-frame to be of wood; the iron plating to be run up to the top of beams; the centre of water-wheel shaft to be 49 feet 3 inches forward of stern-post.

SPECIFICATIONS FOR THE MACHINERY COMPLETE.

ENGINE, BOILER, ETC.

General Description.

Engine to be a marine condensing-beam engine of the usual river-boat style.

To have a cylinder 36 inches diameter and for 7 feet length of stroke of piston; to have a skeleton-beam of cast-iron, with strap of best malleable iron.

Water-wheels of wood and iron, with main arms and buckets of best white oak, and short arms and rims of iron; diameter about 20 feet by 5½ feet face, and 21 inches bucket.

To have balanced poppet-valves with "Stevens" patent cut-off.

Boiler to be a cylindrical "lobster-back" return-flue boiler, with steam-chimney.

Digitized by Google

Engine to be placed in the boat with the shafts aft and the boiler forward of the engine; centre of shafts to be 49 feet 3 inches forward of after side of stern-post.

Cylinder, etc.

Cylinder to be of fine, close-grained cast-iron, having flanges well bracketed for bolting to gallows-frame; to be accurately bored 36 inches diameter, and bell mouthed at both ends to a little within the stroke of the piston; stroke of piston, 7 feet.

Cylinder, top and bottom, to be fitted with faced joints, and the top well ribbed and fitted with suitable eye-bolts for lifting the same; cylinder-top to be either cast double-shell or fitted with a loose cover, turned and polished.

Steam-Chests and Side-Pipes.

Steam-chests and side-pipes to be of cast-iron; side-pipes not less than 10½ inches internal diameter, the valves and openings of a corresponding area; the side-pipes to be fitted with "Dunham's" patent expansion-joint, and to be turned and polished the whole length.

Steam and exhaust-valves and seats to be of composition; valve-stems of cast steel.

Bonnets of steam-chests to be fitted with faced joints and to be turned and polished.

Rock-shafts, toes, lifters, and arms to be of cast iron, and to be turned and polished.

Lifting-rods of wrought iron; boxes for rock-shafts and lifting-rods to be of composition; steam lifting-rods to be fitted with suitable springs for returning the valves to their seats.

Bed-Plate.

Bed-plate to be of cast-iron, top flange 1¼ inches thick, the sides of channel 1 inch thick, and the bottom 1⅛ inches thick; depth under air-pump not less than 16 inches; to be cast with raised flanges for both condenser and air-pump; plate to be fastened to keelsons by bolts 1⅛ and 1¼ inches diameter.

Foot-valve bonnet to be of cast-iron, well ribbed, and fastened by six bolts, 1¼ inches diameter.

Foot-valve seats to be of composition, well fitted in the channel and keyed with composition or lignum-vitæ keys; two foot-valves of pure rubber, ¾ to ⅞ inch thick.

Digitized by Google

Condenser

To be of cast-iron, 36 inches internal diameter and $\frac{7}{8}$ inch thick, and height not less than 46 inches; to be fitted with one scattering-plate and a goose neck injection-pipe, 4 inches diameter; condenser to be formed with large and strong flanges for fastening to gallows-frame and keelsons.

To be cast with proper injection-nozzles, and all joints to be faced joints.

A man-hole to be provided in condenser, and plate properly fitted.

Air-Pump, etc.

Air-pump to be equal in capacity to 24 inches diameter by 32 inches stroke; to be of best cast-iron; to be bored, then lined with composition and again rebored.

Floating-top and reservoir to be of cast-iron; top to be recessed in face and wood or rubber facing fitted; top to have eyes for lifting it from its place.

The reservoir to be of cast-iron, and to have cast-iron close top, with a copper air-pipe fitted.

The air-pump bucket and foot-valve frames and guards and bolts to be of composition; bucket-valves to be of pure rubber, $\frac{3}{4}$ to $\frac{7}{8}$ inch thick.

Side delivery-pipe to be 9 inches diameter, of copper, $\frac{5}{16}$ inch thick, with heavy wrought-iron ring, full size of delivery-valve, riveted on outside of hull.

Piston-Rod, etc.

Piston to be of close-grained cast-iron, double-shell and hub well banded with wrought-iron.

Follower to be ground and scraped to face, and held by 1-inch steel bolts with composition nuts.

Piston to be fastened to rod by nut or key, as may be determined, and to be fitted with metallic packing-rings, actuated by steel springs.

Piston-rod to be of best wrought-iron, $3\frac{5}{8}$ inches diameter, and accurately turned to gauge, and properly fitted and fastened to piston and socket.

Socket for piston-rod to be of best malleable iron, $5\frac{5}{8}$ inches diameter, accurately turned and fitted to piston-rod and crossheads, and well finished, with steel set-screws in the crown to hold the same in place.

NOTE.—If preferred, the socket may be of cast-iron, with a wrought-iron binding-strap of suitable dimensions.

Digitized by Google

Cross-Heads

To be of best wrought-iron; journals, 3½ inches diameter by 4 inches length; jaws of wrought-iron, held by two bolts of 1⅛ inches diameter; gibs of lignum-vitæ or composition, 2 inches by 8 inches in length; the whole to be well fitted, turned, and polished.

Front Links

To be of wrought-iron, 2⅞ inches diameter in the neck, and journals 3½ inches diameter by 4 inches in length, well fitted with composition-boxes, gibs, keys, and steel set-screws; the whole well finished and polished.

Connecting-Rod

To be of not less than 15½ feet in length from centre to centre; diameter of upper neck 3½ inches, and of lower neck 3¾ inches, and 5¾ inches in the centre.

Fork-end journals 3½ inches diameter by 4 inches in length; crank-pin journal 5 inches diameter by 7 inches in length.

Rod fitted with composition boxes; those for crank-pin lined with "Babbitt" metal; straps, gibs, keys, and steel set-screws; truss-rods 1⅛ inches diameter, with 18 to 20 inches spread.

Crank-Pin

To be of the best hammered iron, journal 5 inches diameter by 7 inches in length, keyed in driving-crank and fitted in drag-crank with bearing-pieces of composition and adjusting-screws.

Air-Pump Crosshead, etc.

Air-pump crosshead and connections to be of wrought-iron, well fitted and finished; journals of air-pump links to be 2½ inches diameter by 3 inches in length, and fitted with composition boxes; air-pump rod to be of wrought-iron, covered with cast brass, to be 2¾ inches diameter when finished.

Cranks

To be of hammered iron; eyes to be bored, and cranks shrunk on shafts and keyed on with steel keys; web in middle of length to be not less than 10 inches by 4½ inches.

Working-Beam

To be a skeleton-beam, not less than 13½ feet length from centre to centre, and 6 feet 8 inches width over strap; strap to be of best hammered iron. least section 11

Digitized by Google

square inches, and thickened at least ⅜ inch at top and bottom, and near the end centres.

The cast-iron skeleton to be not less in section of long arms at root of the curve at the main centre than ⅝ by 13½ inches, with heavy edge-moulding running all around; skeleton to be well ribbed, and main-hub hooped with wrought-iron bands 1¼ inches square.

Main-Centre

To be of best hammered iron, planed octagon where it passes through the hub of beam; journals to be 5¾ inches diameter by 8½ inches in length; boxes for centre to be of composition, and pillow-blocks thoroughly fitted and fastened.

Pillow-Blocks.

For beam and shaft, pillow-blocks to be of strong cast-iron, made heavy, with proper flanges and ribs; boxes to be of composition, truly bored and fitted; those for shaft pillow-blocks to be babbitted.

All the fastenings for shaft pillow-blocks and a part of those for beam pillow-blocks to extend to the keelsons; the base of the pillow-blocks to be planed before bedding to the gallows-frame.

The caps of both beam and shaft pillow-blocks to be made to clasp or lip over the jaws of blocks.

Base of main pillow-block in section 3¼ by 10 inches.

Cap of main pillow-block in section 2½ by 9 inches.

Base of beam pillow-block in section 3¾ by 8½ inches.

Cap of beam pillow-block in section 3½ by 7 inches.

Two cap-bolts to each block 2½ inches diameter.

Water-Wheels and Shafts.

Water-wheels to be of the style known as the "skeleton-wheel;" to be 20 feet diameter over the buckets by 5 feet 6 inches face and 21 inches width of bucket.

Wheels to have 18 buckets, nine arms of best white oak, 10 inches by 3 inches at flange and 6 inches by 3 inches at outer rim.

Outer rim of iron, 4 inches by ¾ inch, with wrought-iron or cast-steel clamps over ends of wood arms, 4 inches by ⅝ inch, riveted to rim with ¾ inch rivets and keyed to arms with live-oak or locust keys.

Inner rim to be about 27 inches inside of outer rim and to be of iron, 3½ inches

Digitized by Google

by $\frac{5}{8}$ inch, with cast-iron or cast-steel clamps over wood arms, $3\frac{1}{2}$ inches by $\frac{1}{2}$ inch, riveted with $\frac{3}{4}$ inch rivets and keyed to arms with live-oak or locust keys.

The butts of the rims to be closely fitted and covered with long butt-strap, having three rivets, $\frac{3}{4}$ inch diameter, on each side of butt.

Intermediate short arms to be of iron, $3\frac{1}{2}$ inches by $\frac{3}{4}$ inch, with T ends, and riveted to rims at each end with four $\frac{3}{4}$ inch rivets.

Hook-bolts for buckets to iron arms and plain bolts to wood arms; all the buckets to have an iron plate, $\frac{5}{8}$ inch by 3 inches, under the nuts of the bucket-bolts; and to the iron arms a similar plate between bucket and arm; wood arms to have proper cross-braces of wood or iron, as may be determined.

Two flanges, about 54 inches diameter, in each wheel, bored and keyed to the shafts with two keys each.

Water-wheel shafts to be of best malleable iron, 9 inches diameter of main journal by 11 inches in length, and the whole length suited to boat; out-end journals $6\frac{3}{4}$ inches diameter by 8 inches in length, and fitted with lower box of composition; buckets $1\frac{3}{4}$ inches thick.

Shafts to be turned the whole length, with proper gunwale and outboard journals and pillow-blocks to suit.

The outboard journal to have a collar on its outboard end; flanges of cast-iron, to be well ribbed; hubs to be hooped with wrought-iron bands shrunk on, and to be bored and keyed to shafts with two keys in each flange.

Throttle-Valve.

Throttle-valve to be of composition and pipe lined with composition; valve-stem of steel.

Feed-Pumps.

There will be two feed-pumps worked from air-pump crosshead, each equal to $3\frac{3}{4}$ inches diameter by 32 inches stroke; pump-barrels, with piston and followers, valves and seats of composition; chest of cast-iron, and to be fitted with a proper copper or cast-iron air-chamber.

The delivery-pipes from the two pumps to be connected so as to feed through the same check-valve, with proper stop-cocks, so that either or both may be used.

Bilge-Pumps.

To have one copper bilge-pump, $4\frac{1}{2}$ inches diameter, and worked from air-pump cross-head; also arranged to be worked by hand.

Digitized by Google

Side-Delivery Valve.

To be a poppet-valve, 9½ inches diameter, with cast-iron chamber and composition valve-stem and gland, and fitted with handle for tricing up.

Injection-Valves.

To have one bottom, one side, and one bilge-injection valve of composition; bottom valve and side valve 4 inches diameter and bilge-valve 3 inches diameter.

Sea-Valves.

There are to be proper sea-valves fitted to all openings through the vessel below water-line, with composition valves and seats; a proper wrought or cast-iron neck to be riveted to hull to connect valve.

Steam-Pumps.

There will be properly fitted, with all necessary pipes, cocks, valves, and connections, a No. 3 steam-pump, with crank motion arranged to work as a feed-pump, having separate feed-pipe and check-valve from that of engine feed-pumps; also, as a bilge-pump, to distiller or fire-engine, with hose-nozzle at main-deck and at upper deck, furnished with 100 feet rubber hose, with couplings, and one metal and one leather nozzle pipe; the suction for steam-pump to be taken from the side and not from the bottom.

There will also be fitted to one of the sea-pipes a 1¼-inch hose-cock, fitted with 16 feet of rubber hose, for wetting down ashes.

Pipes.

Main steam-pipe to be of copper, $\frac{3}{16}$ inch thick, with composition flanges; pipes leading into bilge for suction of bilge-pumps, and for bilge-injection, will be of lead; steam-pipe for donkey-pump will be of wrought-iron; all other steam and water-pipes will be of copper, and very heavy.

Boxes.

All journals about the engines to be fitted with composition boxes; those for main-shaft journals and crank-pin to be babbited.

Oil-Cups and Drip-Pans.

Oil-cups of improved construction, with tallow or oil-cocks for cylinder and pumps, and copper or brass drip-pans, to be furnished to all journals where required.

Digitized by Google

Valve-Seats.

The valve-seats of all poppet-valves to be secured in place by riveting or by set-screws.

Bells, Speaking-tube, and Whistle.

There will be furnished and fitted to engine-room one finished 12-inch gong, and one jingle-bell, arranged to be rung from the pilot-house, and from the after-part of deck; also, a brass speaking-tube from pilot-house to engine-room; also, one brass steam-whistle, 6 inches diameter, with stop-valve at the boiler, and wrought-iron steam-pipe and all necessary connections for blowing it from the pilot-house.

Gauges, Indicator, etc.

To be furnished for engine-room and fitted: One 6½-inch brass-case steam gauge, one 6½-inch brass-case vacuum-gauge, one engine-counter, one marine clock, and one indicator, with all their connections and attachments; also, one iron-case 6½-inch steam-gauge for fire-room.

Ladders.

There will be furnished one wrought-iron ladder and rail to fire-room, one to promenade-deck, and one from promenade-deck to head of gallows-frame, with cast-iron landing-steps and brass rail.

Fastenings.

All fastenings for the engine, and for gallows-frame, and truss-braces to guards, and for boiler, to be furnished and fitted.

Eye-Bolts.

All necessary eye-bolts for lifting and handling the various parts of the machinery to be furnished and fitted.

Distilling Apparatus.

A distilling apparatus capable of producing 250 gallons fresh-water per day, to be furnished and fitted with all necessary cocks, valves, and pipes; water-pipes to be of copper; steam-pipes of wrought-iron; to be connected by pipes and valves with the water-tanks.

Felting and Staving.

Cylinder to be covered with hair felting 1 inch thick, outside of which is to be covered with narrow staving, held in place by brass bands and screws.

Digitized by Google

Boiler.

To have one cylindrical-shell "lobster-back" return-flue boiler, with two water-leg furnaces, 6 feet 6 inches long; return-flues to be returned to the back end of the furnaces only.

Length of boiler 26 feet 6 inches; inside diameter of waist 7 feet 10 inches; width of front 9 feet; steam-chimney 10 feet 6 inches in height from top of shell, and 6 feet 6 inches external diameter, with flue 42 inches diameter.

There are to be five main flues from each furnace, three of 10½ inches diameter, one of 10 inches, and one of 16 inches diameter; return-flues in two tiers, seven flues of 10 inches diameter in each tier; all these flues are to be *welded* and *drawn flues*.

Main steam-chimney flange, the waist flange, and all longitudinal seams of shell of boiler and steam-chimney, and the lower seams of legs, to be double-riveted.

Flat work braced, not exceeding 7½ inches, centre to centre, with ⅞-inch socket-bolts, and other parts braced of corresponding strength.

Circular part of shell, No. 1 Birmingham wire-gauge; shell of steam-chimney, No. 2 Birmingham wire-gauge; steam-chimney flue and connection of mild steel, $\frac{5}{16}$ inch thick; the fire-box or furnace-plates of mild steel, No. 2 Birmingham wire-gauge.

Flues No. 3 and 4, Birmingham wire-gauge; heads of shell, flat work, and connections to be No. 2 Birmingham wire-gauge.

Socket-bolts of steam-chimney to have nuts and washers, and not to exceed 11 inches distance from centre to centre on the flue side.

Boiler to be tested and to stand satisfactorily 65 pounds per square inch, cold-water pressure.

The iron for the boiler must be of the best quality throughout; no puddled iron will be accepted.

The rivets throughout the boiler to be of a diameter and pitched at a suitable distance to the thickness of the plate-iron.

All necessary man-holes and hand-holes to be cut and fitted with proper rings, plates, guards, and bolts.

All doors to be double, or have a lining properly fitted and drilled, and hung with suitable hinges.

Digitized by Google

All necessary lugs for bearing-bars and for slicing-bars to be furnished and fastened in place.

Boiler, when completed, to be painted with two coats brown paint.

Ash-Pans.

Under the furnaces are to be cast-iron ash-pans, made in one width for each furnace, and seated on brick and cement; bottom of pans $\frac{5}{8}$ inch thick and flanges $\frac{1}{2}$ inch thick, and properly fitted against the chairs which support the boiler; ash-pans to have a long beveled front flange projecting at least 15 inches from front of boiler, to catch dropping fire and cinders from doors.

Fastenings and Supports of Boiler.

The furnace part of the boiler is to rest on cast-iron chairs, set outside the ash-pans, in oil cement; the waist to rest on two cast-iron saddles, properly fastened.

The boiler is to be fastened by suitable turnbuckle bolts, so as to be held perfectly secure when at sea.

Grate-Bars.

Grate-bars to be of cast-iron, in two lengths, $\frac{6}{8}$ inch thick on the face and $\frac{5}{16}$ inch thick at lower edge, with $\frac{5}{8}$-inch air-spaces, furnished and fitted with all necessary bearing-bars, slicing-bars, etc.

Felting.

Boiler and steam-chimney to be covered with hair-felt, $1\frac{1}{2}$ inches thick, with backing of wool felt or galvanized sheet iron jacket, as may be directed, all properly secured in place; steam pipes to be covered with hair felt, 1 inch thick, with backing of canvas, well secured and painted.

Boiler Attachments.

There is to be furnished and fitted to the boiler one steam stop-valve, not less than 10 inches diameter; one safety-valve, 7 inches diameter, with connections to engine-room, and copper escape-pipe, 16 feet in length; one bottom blow-valve, $2\frac{1}{2}$ inches diameter; two check-valves, $2\frac{1}{2}$ inches diameter; one surface blow-valve, 2 inches diameter; one screw stop-valve for steam-pump; one screw stop-valve for hose connection and fresh-water pipe; all of the valves to be of composition, with composition seats and stems.

Four brass gauge-cocks with drip-pan and pipe, one glass water-gauge, 16 inches in length, and one salinometer and instruments, with connecting pipes of copper, and one spring steam-gauge.

Digitized by Google

Smoke-Chimney

To be 42 inches diameter, 25 feet in height, in three courses of 7 feet each and one taper course of 4 feet; to be flush-jointed with bead-iron bands at butts; the upper course to be of iron, No. 14 wire-gauge, and the rest of No. 12 wire-gauge; a $2\frac{1}{2}$ inch angle-iron band to be riveted to top, and a band $2\frac{1}{2}$ inches by $\frac{3}{8}$ inch at bottom.

Chimney to be fitted with a proper damper, having connections leading to engine-room, for opening and closing.

A casing around lower part of smoke-chimney and where the smoke-chimney comes through the decks, to be made of iron, No. 12 wire-gauge, and fastened to deck with angle-iron; also, a neat umbrella above the casing to permit ventilation; to be six stays to chimney, of wire-rope $\frac{9}{16}$ inch diameter, with proper connections at chimney and at deck.

Chimney, umbrella, and casing to be painted with two coats brown paint, both inside and outside, and with a third coat outside, such color as may be directed.

Deck-Scuttles.

There are to be furnished and fitted eight cast-iron deck-scuttles, to have close covers and gratings, frames bored and covers turned, and arranged in the usual manner.

Cast-Iron Flooring.

The whole of the fire-room floor to be covered with cast-iron floor plates, rough surface, least thickness $\frac{1}{2}$ inch, and laid upon a course of brick and cement; also, a cast iron floor plate to be laid in engine room, next steam chest, if required; all necessary iron gratings and railings about the engine to be furnished and fitted.

Ventilators.

There will be two ventilators, of iron, to fire room, 16 inches diameter, with revolving bell-mouthed heads above promenade deck, and to be painted with three coats brown paint, both inside and outside.

Gallows-Frame

To be of yellow pine; main uprights $8\frac{1}{2}$ by 10 inches at the head, and 11 inches by 14 inches at the heel.

All the wood work of the gallows frame and "A" frames for guards to be furnished and fitted and to be thoroughly fastened.

Digitized by Google

Steam-Heaters, etc.

One steam coil of brass piping, having 16 feet radiating surface, to be furnished and fitted in pilot house for heating the same, with all the necessary valves and pipes of brass or copper; also, for saloon, one pedestal radiator, with not less than 60 feet surface; one for master's room, with 30 feet surface; one for cabin, with not less than 60 feet surface; and one for the forecastle, of 36 feet surface; all to be fitted with the necessary steam and drain valves and pipes; also, steam pipe and valve must be arranged for heating water in the bath-room.

Water-Tanks.

There are to be furnished and fitted two wrought-iron water-tanks, to contain 300 gallons each; to be made of iron, No. 6 wire-gauge, with the necessary man-holes and plates; they are to be connected with each other by a wrought iron pipe, 1½ inches diameter, with stop valves; there will also be a pipe leading from distiller to connecting pipe, and pipes for ventilation.

There is to be a ¾-inch stop-cock near the bottom of each tank for drawing off the water; also, a sufficient quantity of 1¼-inch wrought-iron pipe to lead from tanks and connect to galley-pump, and brass pump, furnished and fitted.

Oil and Tallow Tank.

One iron oil-tank, with lock-cock, to contain 35 gallons, to be furnished and fitted and fastened as may be directed; also, one copper oil-tank, to hold 10 gallons, with cover and drip-pan, to be fastened in some convenient part of the engine-room.

A sheet-iron tank, to contain 60 pounds tallow, to be furnished, fitted, and fastened as may be directed.

Waste-Tank.

A sheet iron waste tank, to contain 30 pounds waste, to be furnished, fitted, and fastened as may be directed.

Painting.

All the work not finished to have three coats of paint, the last coat of such color as may be directed.

Patent-Rights.

If any article or arrangement used about the machinery or boiler, or in their construction, is the subject of a patent-right, the royalty for the use of the same is to be paid for by the contractor.

Digitized by Google

All the materials and workmanship of the engine and boiler, and their appurtenances, are to be of the best quality, and the whole completed and erected in a substantial and workmanlike manner, equal in every respect to similar work of the first class.

It is the intention and meaning of this specification to include all materials and workmanship necessary to complete the engine and boiler, and their attachments and connections, in every respect ready for operation and service; and the contractor must furnish all that is required so to complete them, whether particularly specified or not, to the satisfaction of the Light House Board, and without extra compensation therefor.

Digitized by Google

Digitized by Google

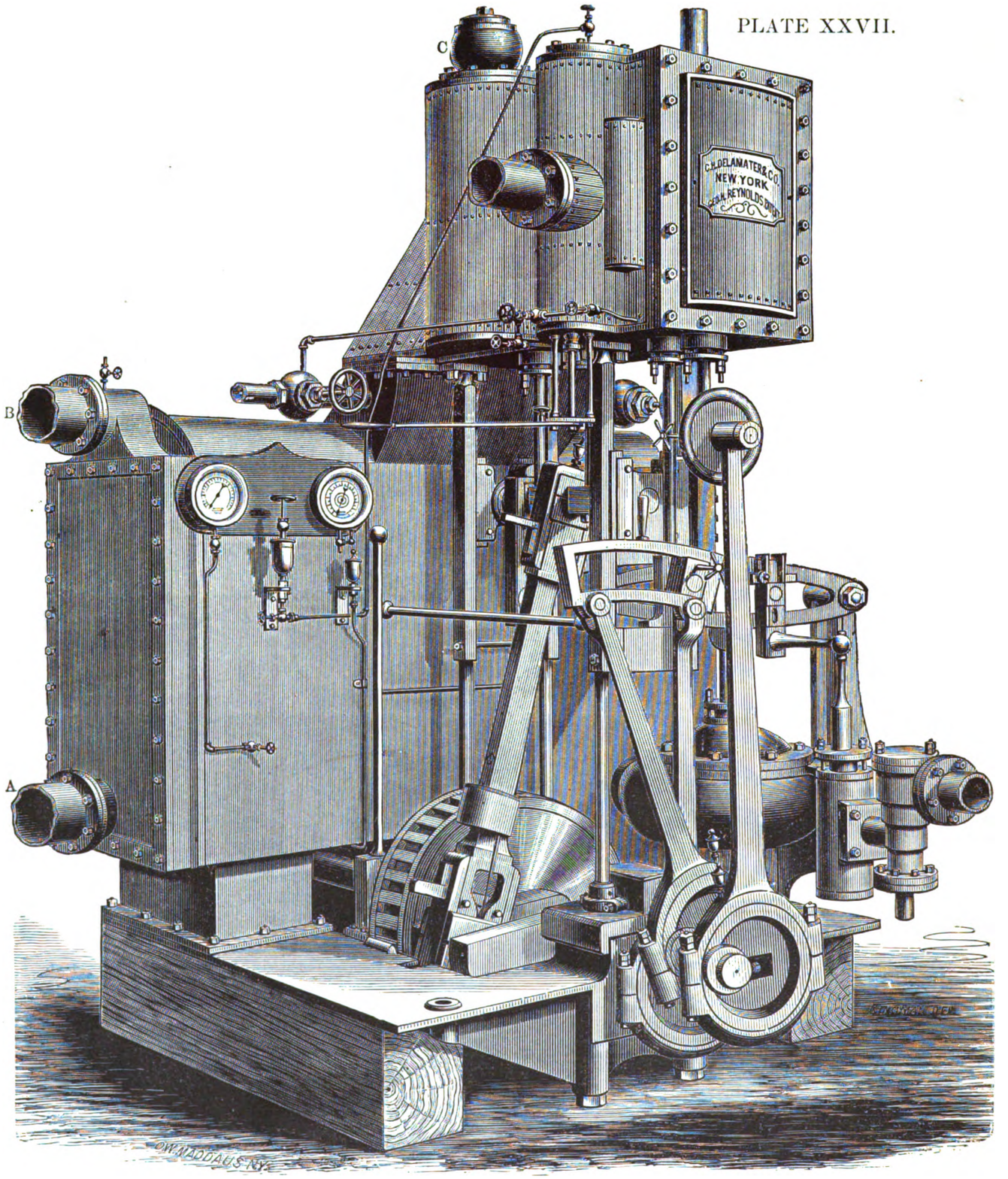

ENGINE OF THE STEAM YACHT "IDEAL."

UNIV. OF MICH.

Digitized by Google

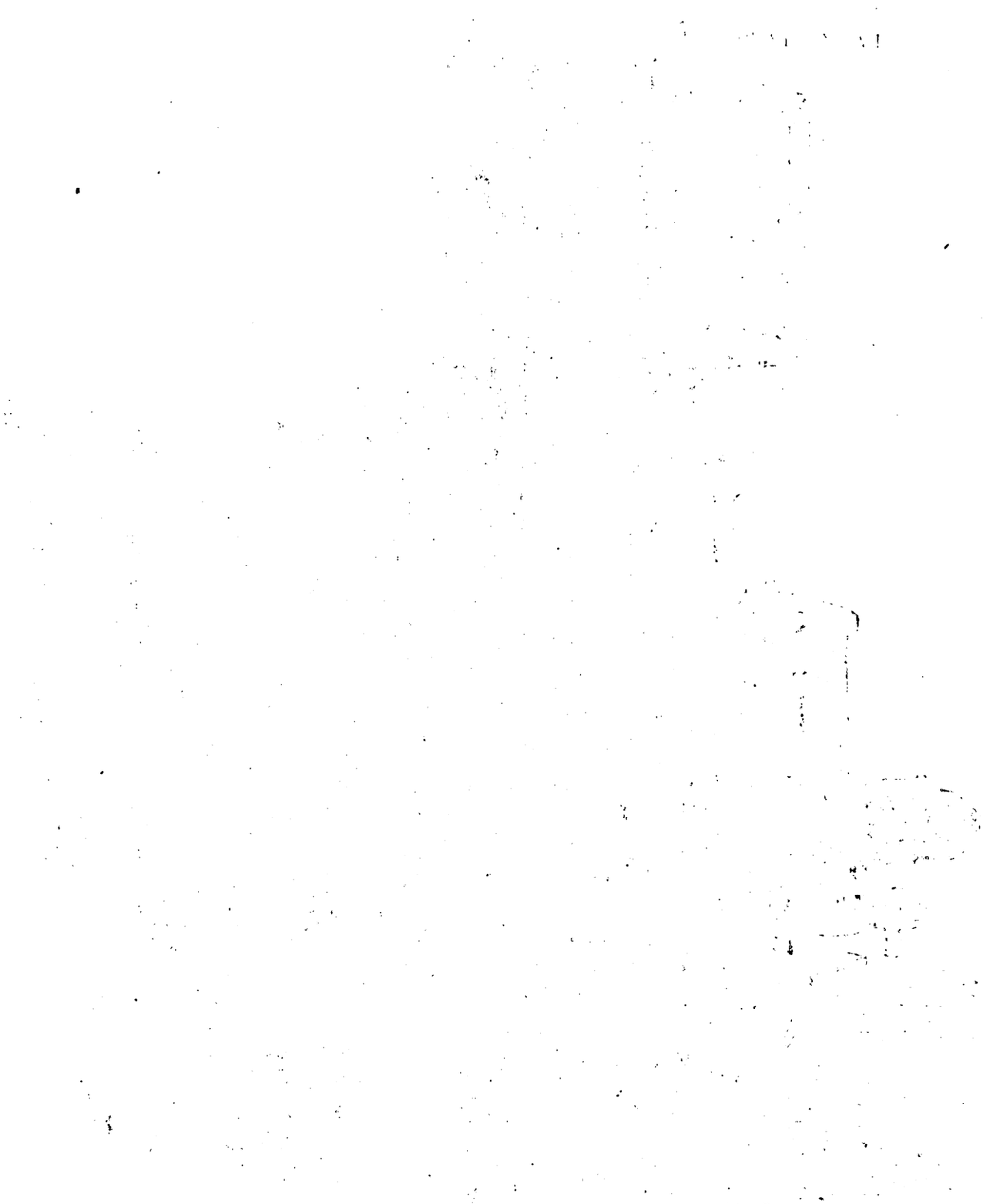

Digitized by Google

CHAPTER XXI.

ENGINE OF THE STEAM YACHT "IDEAL." DESIGNED BY GEO. H. REYNOLDS. CONSTRUCTED BY "THE DELAMATER IRON WORKS," N. Y.

Plate XXVII. represents a marine engine of novel design for the steam yacht "Ideal," of the following dimensions, viz.:

Length on deck,	130 feet.
Breadth (moulded),	20 "
Depth of hold,	8 "
Draught (forward),	5 "
Draught (aft),	7 "

The first peculiar feature of this engine is, that it has no frame like most marine engines, but instead the cylinder is mounted upon four steel bars attached to the binders of the pillow blocks. The lower ends of these bars are turned, and the upper parts are planed square, and are thus made to serve a double purpose; for while they act as a support to the cylinders, they also perform the office of slides and holding down bolts. The reader will observe by the plate, that there are two piston rods connected to the crosshead, with the connecting-rod between them. The engine is thus made light and at the same time very strong by the manner in which the cylinder is bolted to the condenser. The flange is made of extra length athwartships, so as to meet the resistance when the crank is on the quarter.

The air-pump is worked by a beam connected by links to the main crosshead. The manner in which it is secured to the channel-way in the bed-plate, in relation to its position with the condenser, is such that the discharge valve of the air-pump and bottom of the condenser are in the same level, so that the water in the condenser can always prime the air-pump. The condenser is of the surface kind, with an independent circulating pump, and can be converted to a jet condenser in case of accident to the pump.

Taken as a whole, this engine has many commendable features about it, and reflects great credit upon its designer; while its performances at sea prove it to have been constructed in the very best manner.

Digitized by Google

CHAPTER XXII.

HOFFMAN'S IMPROVED MARINE ENGINE. (PLATE XXVIII).

THE cylinder is completely jacketed with live steam taken direct from the boiler through a $1\frac{1}{4}$" pipe. The jacket casing is of boiler plate $\frac{3}{16}$" thick, riveted on to the cylinder, leaving a steam space of $\frac{3}{4}$ inch all the way around the cylinder. The surfaces on cylinder and jacket are perfectly smooth, thus offering no obstruction to drainage. *No water can lodge in this jacket.*

The cylinder heads also act as jackets, live steam being admitted to each, and each is drained at the bottom.

All water from condensation is trapped into a small tank, and is from thence forced by a small pump, working continuously with the engine, into the boiler.

The main steam valves are connected by a right-and-left screw for perfect adjustment. They are balanced up to two-thirds of the chest pressure, by rings fitted to the chest bonnet, the lower rings being made of cast-iron, while the upper ones are a series of thin plate rings, each $\frac{3}{32}$ inch thick, convexed and concaved faces placed together for elasticity. The rings are brought to the proper bearing by four set-screws. The space inside the ring forming the balancing surface is $\frac{1}{16}$ inch deep, and is connected to the upper end of the small double-acting drain pump, which maintains a vacuum under the rings, and by which any leakage can be detected at once.

The main valve is worked by an eccentric, which transmits its motion to the valve stem by a peculiar lever and wrist-plate combination, giving a very rapid movement to main valve at the point of opening and past the half stroke, when it begins to reduce its speed, and at full port pauses and moves toward the close very gradually, until the half travel is passed again, when it closes, as it opened, with great rapidity. By this means a port of twenty square inches (which is the size at the cylinder bore) is just as efficient as 26 square inches would be with a simple eccentric motion. The ports are each $\frac{13}{16}$ inch wide in each valve, outside lap $\frac{3}{4}$ inch, inside $\frac{3}{32}$ inch. Travel of valve $3\frac{5}{16}$ inches.

Digitized by Google

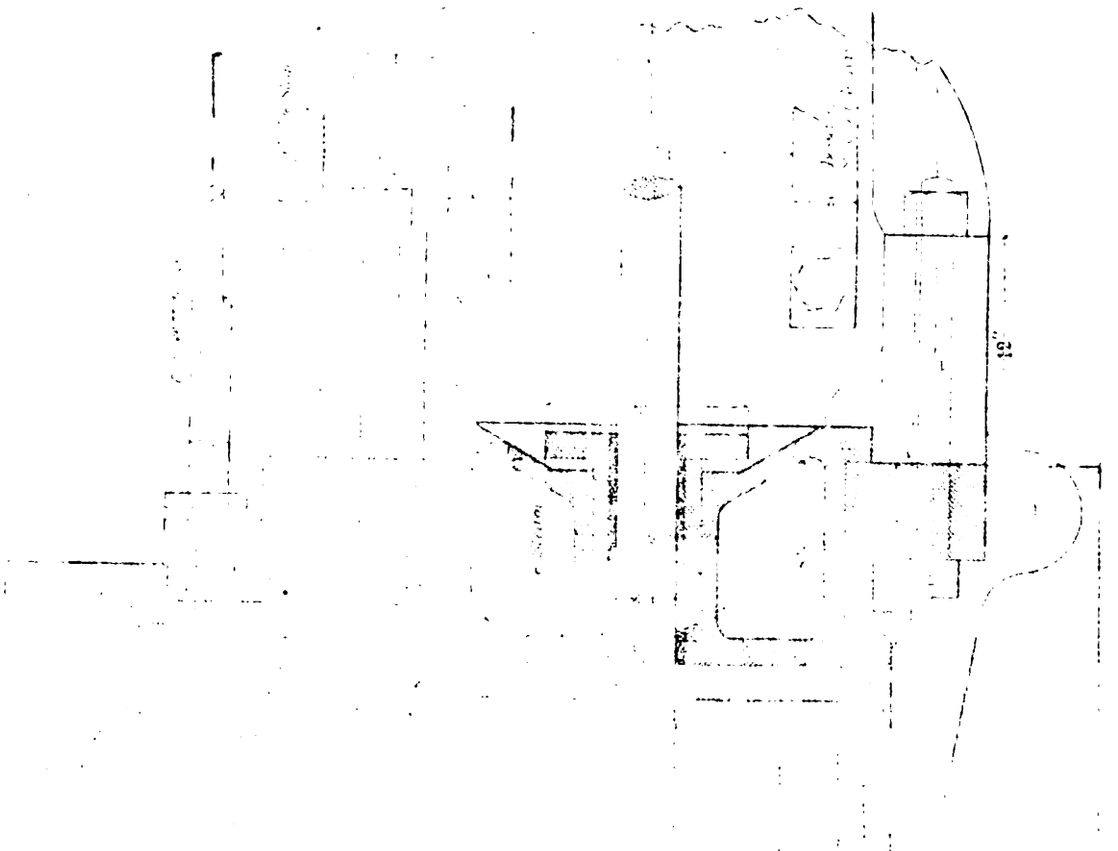

Digitized by Google

CHAPTER XXII.

[illegible] MAKING ENGINE. (PLATE XXVIII).

[illegible] with live steam taken direct from the boiler [illegible] is of boiler plate [illegible] thick, riveted on to the [illegible] all the way around the cylinder. The sur- [illegible] perfectly smooth, thus offering no obstruction to [illegible] *bracket.*

[illegible] live steam being admitted to each and each [illegible]

[illegible] into a small tank, and is from thence forced [illegible] the engine, into the boiler [illegible]

[illegible] right-and-left screw for perfect adjust- [illegible] of the chest pressure, by rings fitted to [illegible] iron, while the upper ones are [illegible] and concaved faces placed [illegible] proper bearing by four set [illegible] bearing surface is [illegible] inch deep, [illegible] double acting drain pump which [illegible] by which any leakage can be [illegible]

[illegible] which [illegible] its motion to the valve [illegible] combination giving a very rapid movement [illegible] past the [illegible] stroke, when it begins to re- [illegible] the close very gradually, [illegible] opened, with great rapidity. [illegible] the size at the cylinder [illegible] [illegible] eccentric motion. The [illegible] inch inside [illegible]. Travel

Digitized by Google

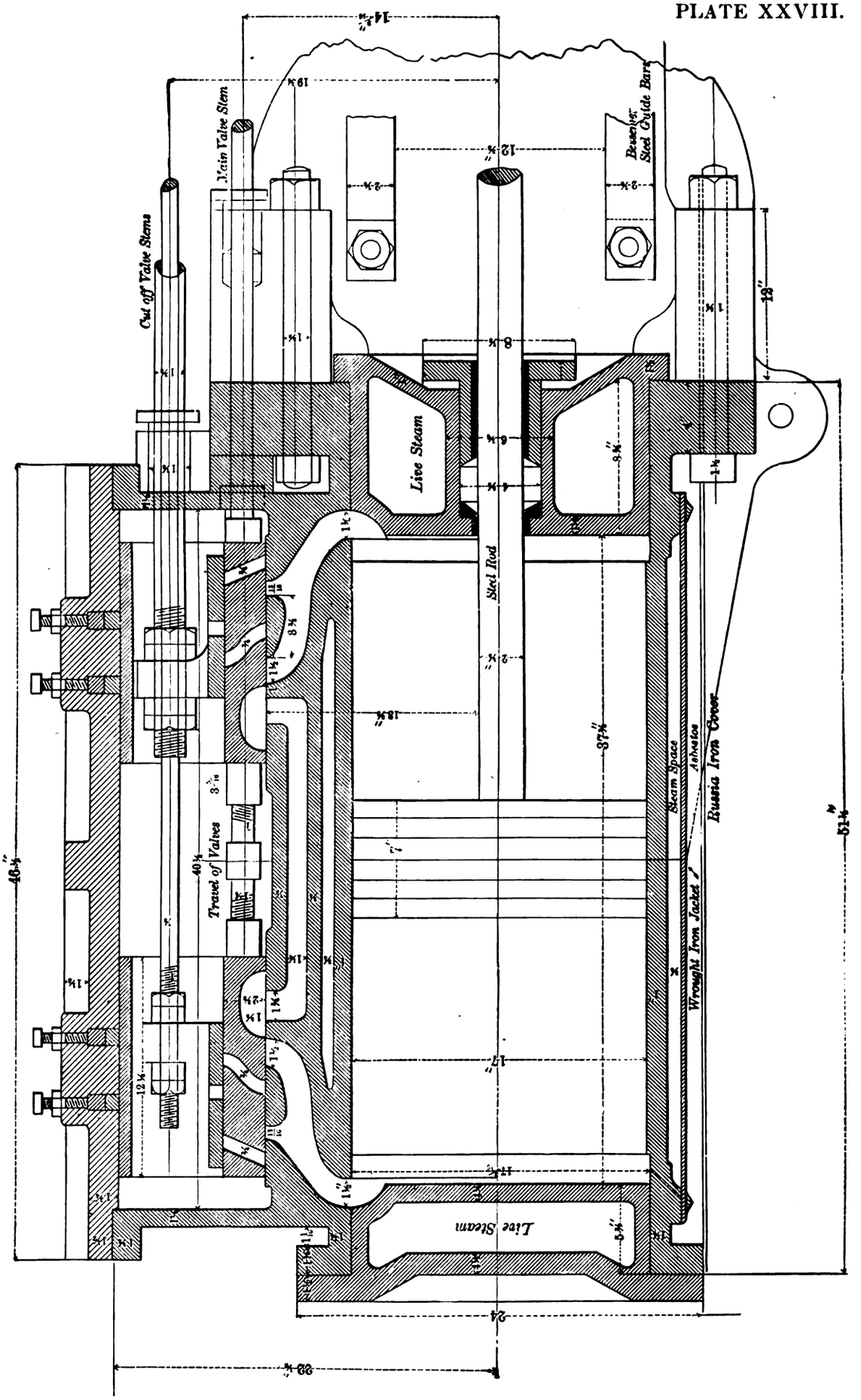

HOFFMAN'S IMPROVED MARINE ENGINE.

Digitized by Google

Digitized by Google

The cut-off valves are also worked by an eccentric and wrist-plate motion. The travel of these valves can be changed at will, but for usual work they will travel four inches. They are operated direct by a centrifugal governor fixed on the main crank shaft. By the lever and wrist-plate combination, used in this case, the cut-off valves have a rapid close by the cut-off eccentric, independent of the extra hastening of the closing by the governor. Both valves can be worked by hand lever (the main and cut-off), and the cut-off valves can be adjusted on the seat of the main valve to any desired point, by a simple device entirely outside of the chest.

REMARKS.—This engine embodies the possession of a perfect constellation of most excellent requirements for marine purposes, and the student can not do better than give it his most careful study. A marine engine built after this design must needs prove most economical and successful.

Digitized by Google

CHAPTER XXIII.

THE HERRESHOFF MARINE ENGINE AND BOILER.

THE products of the Herreshoff Manufacturing Company, of Bristol, R. I., have been before the public for a period of seventeen years, during which time the excellence of their machinery and the superiority of their models, both for sailing and steaming, have won for them a high place in naval architecture. The patent Safety Coil Boiler deserves more than a passing notice; we, therefore, give a detailed description, by which, together with the accompanying figure, its internal arrangement and operation may be easily understood.

The feed water is pumped into the upper coil A, which serves as a feed water heater, through which it flows to the inner part of the main coil B. In the coil B, the water, as it approaches the bottom, becomes more and more vaporized. When it finally reaches the end of the outer coil C, only a small portion of the water, say ten per cent., which is forced in at A, remains liquid. The contents of the coils are discharged through the pipe E, into the separator D, in which the steam and water become separated. The steam flows off through the pipe F, to the superheating coil G, from which it is taken directly to the engine. The water, which has been separated from the steam in the separator, falls to the bottom of it. The height at which it stands may be known by a glass gauge H. The excess of feed water is disposed of in various ways according to circumstances. In marine use, it is returned again to A by a supplementary feed pump, or discharged into the condenser from which it is taken by the air-pump, together with the water of condensation from the steam used by the engine, after which it is discharged by the feed pump into the coil A. In this plan, fresh water is used, and the amount in circulation is constant. Sometimes the excess of feed water is blown overboard immediately from the separator, in which case the desired amount is made up to the feed water by allowing a small amount to flow into the

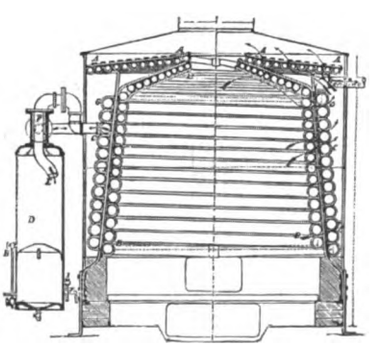

HERRESHOFF COIL BOILER.

Digitized by Google

condenser from the sea, through a pipe fitted with an adjustable cock. When pursuing this method, the feed water contains a small percentage of sea water. In cases where non-condensing engines are used, the feed water is drawn from the sea, and the excess of feed water, which contains a large percentage of salt, is blown off.

The boiler is said to be absolutely safe from explosion, certainly a most admirable quality. It is half the weight of ordinary boilers, and steam can be raised in it with remarkable quickness, as 50 or 60 pounds can be had in five minutes after lighting the fire. Its economy of fuel also is claimed to be equal to the best form of boilers in use.

The engines made by this company have many important characteristics. The distribution of material is well studied. The working parts are light and easily reached. The bearing surfaces are large, and the whole appearance and finish neat and symmetrical. The use of compound condensing engines for marine purposes is a step in the right direction. The advantages they possess over the old plain type are: First, economy in fuel. Although the amount of coal used by a steam yacht is not large, pecuniarily considered, yet the importance of economy in fuel by enabling the vessel to make a longer trip with the given amount, or by reducing the size of the coal bunkers, or the number of times of coaling up (a nasty job), must be allowed by all who are conversant with the handling of steam vessels. Again, the absence of the noise of exhaust and spurting of oily, dirty water, is a feature that would be appreciated by all. There is also an increased durability of all working parts, owing to working the steam more expansively, and, for the most part, running the boiler with natural draft alone. The Compound Condensing Engine, the cut of which is given, has a side lever air-pump, with hot well and feed pump attached to it. It is the representation of the engine exhibited at the fair of the American Institute, New York, 1879, to which, and the boiler, medals of excellence and a diploma were awarded.

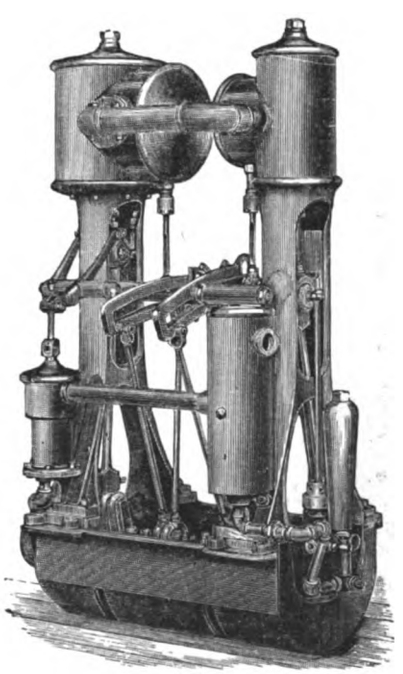

THE HERRESHOFF ENGINE.

Digitized by Google

CHAPTER XXIV.

YACHT ENGINE, BY F. C. & A. E. ROWLAND, NEW HAVEN, CONN.

The figure shows the design of yacht engine by the above-named celebrated builders. The design is simplicity itself, takes up but a very small space in the yacht, and is readily accessible for overhauling or repairs. The crank pin, piston rod,

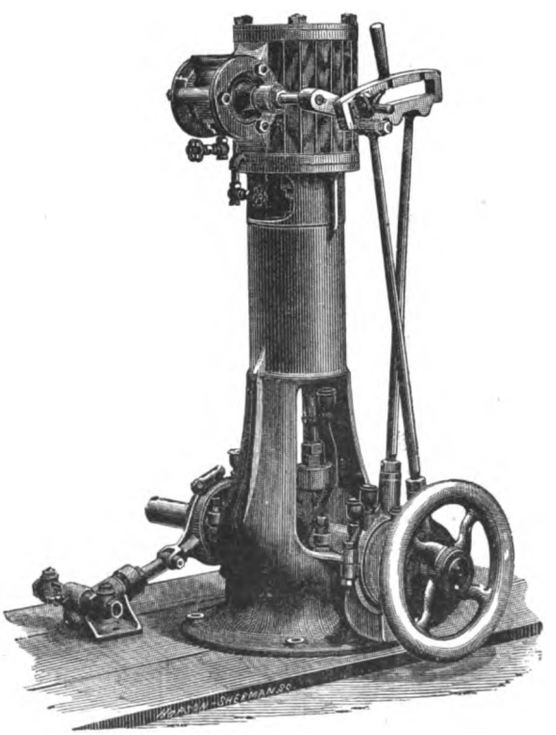

ROWLAND'S YACHT ENGINE.

valve stem, and link pin, are made of steel. The brasses are large, and nicely fitted to reduce friction and wear; and the whole material and workmanship are first-class. This engine is so simple in design, and so well constructed, that almost any man of ordinary intelligence can handle it, dispensing with the services of a skilled engineer. It will pay the student to give it careful study, and if he can improve on it, he will do well indeed.

Digitized by Google

CHAPTER XXV.

YACHT ENGINE BY THE NEW YORK SAFETY STEAM POWER COMPANY.

A SUITABLE engine for driving a steam yacht, launch, or other style of boat, must needs be so designed and constructed that it possesses great strength, with compactness of form, freedom of action, simplicity of construction, completeness of details, and convenience.

Accurate workmanship and fine finish of working parts are sometimes regarded as needless, and some buyers deem it economy to purchase engines lacking in these respects, supposing them to be "just as good." Experience teaches, however, that nice workmanship and accuracy of manufacture, in detail and in general, have an important influence on the daily performance and the term of usefulness of an engine. Particularly is this the case with boat engines which run at high speed.

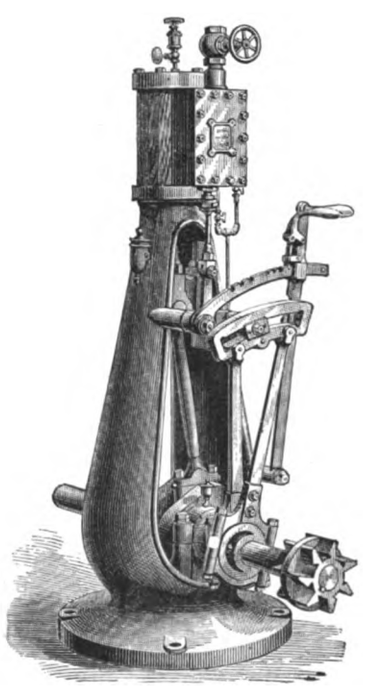

REVERSING ENGINE.

The engines which are manufactured by the New York Safety Steam Power Company embody the qualities above enumerated. They are of the best material and workmanship throughout, and can be relied upon to run continuously for long periods under high pressure and speed without heating journals, undue wearing of any part, or breakage.

We call particular attention to the graceful design and *simple mechanism* of these engines No desirable quality is sacrificed to appearance, yet the form is pleasing to the eye, and also that which secures the greatest strength and rigidity with a given amount of material. All parts are easy of access for adjustment or repairs. In operation they are remarkable for their smooth and noiseless action.

It will be observed that there are two bearings for the crank shaft in the frame, both being cast solid with the column, as are also the cross-head slides. There can

Digitized by Google

be, in consequence, no derangement of lines and no unequal pressure of parts; the bearings are long and the shafts of large diameter, giving both large area of bearings and strength of shaft in excess of any possible requirement. On engines of the larger sizes a thrust-bearing is secured to the engine frame and is adjustable. Cranks are accurately counterbalanced. The piston rod, valve rod, cross-head pin, etc., are of steel. The connecting rod is wrought-iron; its boxes are of composition. The link-motion for reversing is handled by a lever conveniently placed, and provided with a cut-off index, enabling the engineer to set his valve at any desired point of cut-off. In the engines larger than 7x9 the main valve is *balanced*, or, in other words, is so arranged that it does not feel the pressure of steam in the steam chest, and is not pressed hard against the valve seat at expense of friction to be overcome and wear to be sustained; more than this, the valve moves with equal ease whether the steam pressure is ten pounds or one hundred pounds, and at the same time gives double steam and exhaust openings, which greatly facilitate the entrance of the steam to and its escape from the cylinder, securing a nearer approach to boiler pressure, a less back pressure, and saving the power required to work an ordinary valve.

Digitized by Google

CHAPTER XXVI.

BOILERS FOR MARINE USE, BY H. L. STELLWAGEN, M. E.

SPACE is of great consideration on board all vessels, and it is very desirable to obtain a boiler which will occupy the least possible compass, yet designed to give the best results consistent with safety, durability, and economy.

Safety depends greatly upon the quality and strength of material, and on mode of construction.

Durability depends upon the requirements for safety, but more particularly on the facilities afforded for cleaning and repairing.

Economy, while the result of all the above qualities combined, is dependent in a far greater measure upon the design.

In the construction of marine boilers, the joints must have especial care and good workmanship. They are either single or double riveted. The holes should be punched the proportionate distance apart, and correspond exactly with each other, so that neither reaming nor drifting is required, thereby avoiding unequal strains. Where the sheets overlap horizontally, it is best to have the edges next the water facing upward, to facilitate the raising of steam bubbles to the surface.

At present most boilers built for steamboat service, owing to their great diameters, have the longitudinal seams double riveted, except in cases where the pressure to be carried is very low. There are three methods of uniting boiler plates, viz.: machine, and hot or cold hand riveting. The first mode possesses the greatest advantage, and should be adopted wherever possible. In forming the heads by hand riveting, the work is not so thoroughly done, and the metal (especially by the cold process) is apt to become brittle from repeated hammering. There does not seem to be any particular advantage derived from either the hot or cold hand process, each having about equal merit when well done.

The strongest boilers are those composed of tubes and cylinders, that form being best adapted to internal pressure. Flat surfaces should be avoided as much as possible, being weak and unsafe; it is, however, difficult to build a marine boiler without them, owing to its peculiar shape; and where they do occur it is necessary

Digitized by Google

to strengthen them with braces and stays, about one square inch of section of brace (when of copper) being allowed for every square foot of plate subjected to a strain per square inch of not over 20 pounds of steam. Where higher pressures are to be carried, the braces or stays must, of course, be more numerous, a safe rule being not to subject each brace, when of iron, to a greater strain than 8,000 pounds per square inch of section, and when copper, to not over 3,000 pounds.

All angles, irregular surfaces, crowns and sides of furnaces, tube-sheets, stays and braces, ought to be of the very best material.

The tubes for marine boilers are usually from 2 to 4 inches diameter, according to length; it is best to place them in vertical rows, and as they increase in size, so should the spaces between them, to admit of a free circulation.

They are secured and made tight in the tube-sheets by two modes, viz.: Riveting and rolling. The former has the advantage, inasmuch as the riveted ends are a great support to the sheets. For the latter, the only advantage claimed is the facility with which it is done. Where this process is used, the tube-sheets must be well braced, as rolling affords but little support.

Modern marine boilers are designed with from twenty to thirty square feet of heating to one square foot of grate surface, the grate being not over six feet in length, and consuming not over 14 pounds of coal per square foot, and evaporating from 5 to 12 pounds of water per pound of coal. The evaporating power depends greatly upon a due and perfect proportion of the furnaces, and on the quantity of flue surface in contact with the heat. In the horizontal fire-tube boiler, or the return tubular with flues, from $1\frac{3}{4}$ to 2 square inches of area should be allowed over bridge, or through flues, for each pound of coal consumed per hour per square foot of grate, and the area of tubes ought to be from $\frac{1}{8}$ to $\frac{1}{7}$ of the grate surface, according to the amount of coal to be burned, for a natural draught. The crown sheets should be round or oval, and not less than 18 inches above the grate, as a high furnace is favorable to quick combustion. The bars must decline towards the back of the furnace. The depression being about one inch in twelve, their width or thickness ought to be the least practicable, and the spaces between them from $\frac{1}{2}$ to $\frac{3}{4}$ of an inch, according to the kind of fuel used. It is important to have both water space and steam room properly proportioned, and care should be taken, in the selection, that the water space is not diminished by an undue number of tubes and flues. A boiler, to give satisfaction, will depend as much upon a sufficiency of water from

Digitized by Google

Digitized by Google

PLATE XXIX.

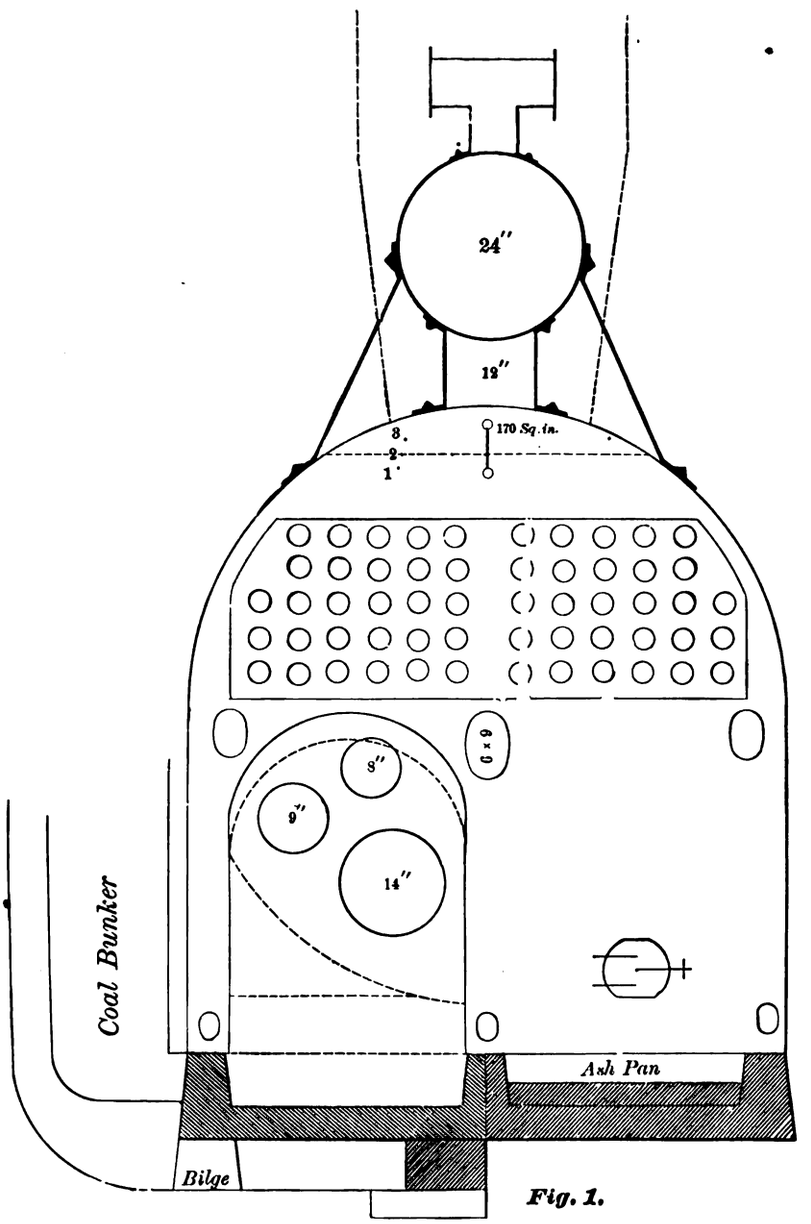

Fig. 1.

STELLWAGEN BOILER.

Digitized by Google

which to gen[illegible]
latter is in [illegible]
The amount of [illegible]
supply of fuel may [illegible]
and check the forma[illegible]
so that the fire [illegible]
the vessel or [illegible]
five times the [illegible]
[illegible] space must [illegible]
[illegible] are [illegible]
room that [illegible]
latter space [illegible]
[illegible]
[illegible]
[illegible]
any [illegible]
[illegible]

sk[illegible]
with [illegible]
r[illegible]
cy[illegible]
[illegible]

Digitized by Google

Fig. 1.

Digitized by Google

which to generate steam as upon the heating surface to evaporate it; and, when the latter is increased at the expense of the water, the result is not at all gratifying. The amount of water should exceed the evaporation in a given time, so that the supply of feed may not greatly reduce the temperature of that already in the boiler, and check the formation of steam. It ought also to be arranged of sufficient height, so that the fire surfaces are in no danger of becoming bare, either from the rolling of the vessel or neglected feed. The space allowed for water should be from three to five times the evaporation, and that for steam about $\frac{2}{3}$ the evaporation. The latter space must always be amply large to avoid priming.

There are many boilers in use, at present, with so little water space and steam room, that, when the water is carried high enough to generate sufficient steam, the latter space is so diminished that, on the pressure being relieved at each stroke of the engine, water is carried with the steam to the cylinder. On the other hand, when the water is lowered to avoid that difficulty, it frequently happens that there is an insufficiency of steam, for want of a proper quantity of water to generate it. Many boilers, likewise, are constructed with area over bridge wall and through tubes too much contracted to afford a free passage for the products of combustion, causing a sluggish draught and greatly diminishing their efficiency. It is to be regretted that so many vessels are supplied with motive power in this limited manner, as the anxieties and labor of engineers and firemen are greatly multiplied, and the wear and tear of the boiler increassd.

To render the foregoing remarks plain and comprehensible, I herewith furnish a sketch and give dimensions of a marine boiler which (from many years experience with the faults and advantages of those in present use) will, I think, give satisfactory results. It is intended to carry a pressure of 75 pounds, and supply steam for a cylinder 15″ by 18″, cutting off at ten inches of the stroke, with a piston speed of 270 feet per minute.

This boiler is of the class of those found in towing and non-condensing freight steamers, is calculated to burn from 10 to 11½ pounds of coal per hour per square foot of grate, and to evaporate 45 cubic feet of water with a natural draught. Both evaporation and consumption of fuel can be increased, however, by using the exhaust in the stack as a blast.

Plates XXIX. and XXX. represent the front and side views. It is of the horizontal return fire-tube type; length of shell, 12 feet; diameter, 78 inches, with a

Digitized by Google

heating surface of 682 square feet, which, being divided by 15, the number of feet required, according to fuel burned, to evaporate one cubic foot of water, gives a total evaporation of about 45 cubic feet per hour.

It has two furnaces, each 5 feet by 2 feet 8 inches; extreme height of crowns above grate in front, 33 inches, increasing to 42 inches at back, owing to crowns rising three inches and the depression of the grate bars. The grates together contain 26⅔ square feet; each furnace has three flues of 8, 9, and 14 inches respectively, their total area in both furnaces, about 536 square inches, being an allowance for the escape of the products of combustion of 20 square inches per square foot of grate, or 2 square inches per pound of coal burned per square foot. There are 56 4-inch tubes, the inside diameter, $3\frac{9}{16}$ inches, which convey the gases from back to front connection, their combined area being about the same as that of the flues, affording a free passage to the smoke stack, the area of which, at its base, is 572 square inches, increasing to 1,018 square inches, three feet above the boiler. The height of stack is about 25 feet, or eight times its largest diameter, having a damper for regulation of the draught.

The contents of front connection is 29½, and that of back connection 43 cubic feet. The tubes are placed vertically 5 inches, and horizontally 5½ inches from centres, with spaces of 4 inches between them and the shell, another of 4½ inches in the middle, the three passages admitting of a free circulation. The water line is 9 inches above the top row of tubes, which is sufficient to prevent them from ever becoming bare. The amount of water contained in the boiler is 191 cubic feet, being four times the evaporation, and is about 7⅛ cubic feet for each square foot of grate.

The steam room is 32⅓ cubic feet, a little more than ⅔ of the evaporation, as follows: Contents of segment above water line 13⅓ cubic feet—steam drum 6 feet long, 24 inches diameter, 19 cubic feet—making the above result of 32⅓ cubic feet. This type is in general use for marine purposes, and when well made will last from 8 to 10 years; repairs being needed after from 2 to 4 years' service.

There are some water tubes in use, but mostly in the navy. This design presents a few advantages over the fire-tube, among which is their capacity for containing water and steam, great amount of heating surface, large grate, with sufficient area for consuming any number of pounds of coal required per square foot. This type of boiler has somewhat the same outward appearance as the fire-tube, but is not the sectional water-tube, which is a design not suitable for marine use.

Digitized by Google

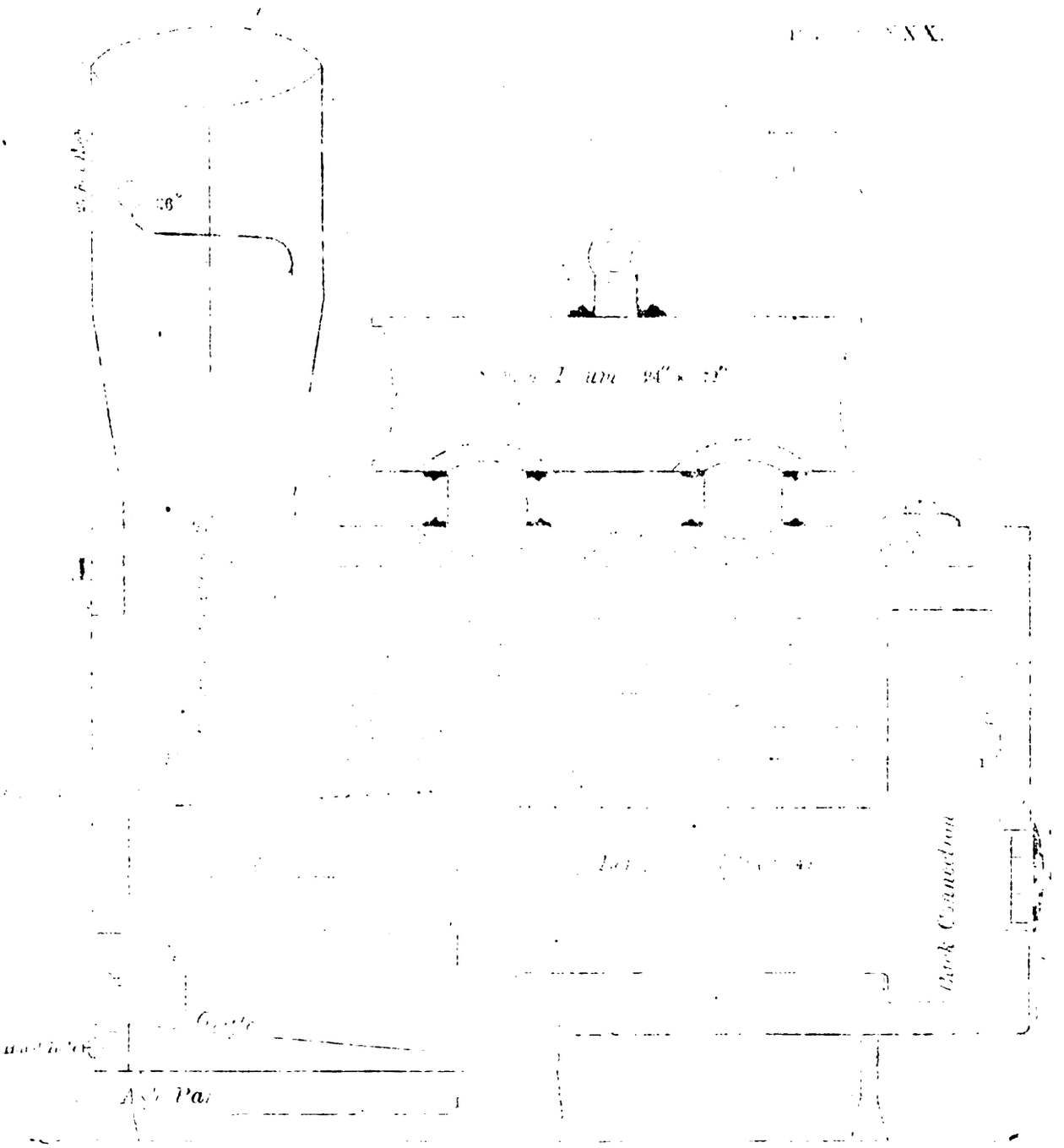
36°
Back Connection

Digitized by Google

PLATE XXX.

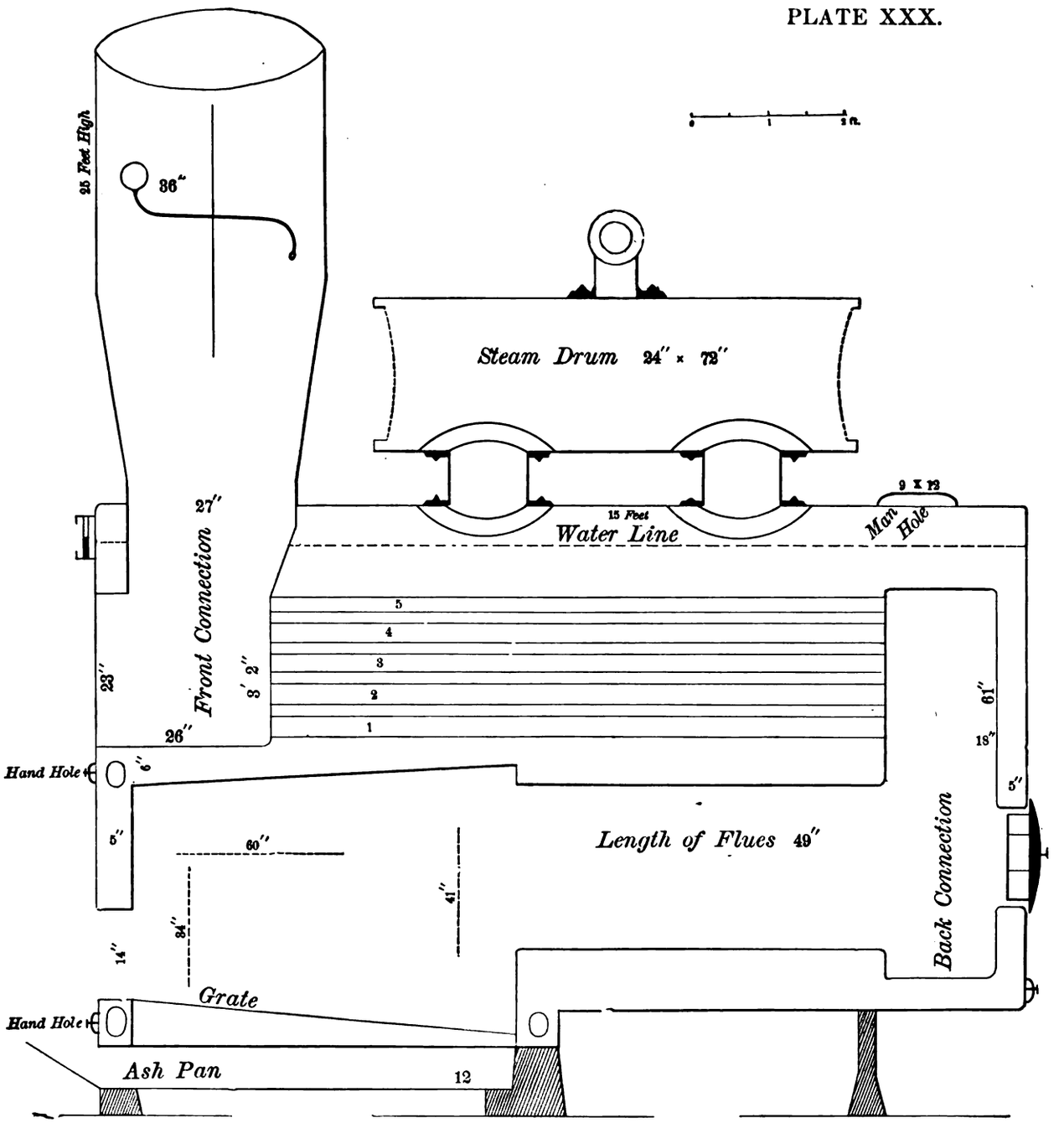

Fig. 2.

STELLWAGEN BOILER.

UNIV. OF MICH.
Digitized by Google

Digitized by Google

Owing to the manner of contracting by many persons, and the limited space for boilers to which makers are confined, may be traced the unsatisfactory results obtained in most cases; often the only requirements given in a contract are size of cylinder, quality of iron, and the pressure to be carried, the most important points being left entirely to the builder. This is certainly a very unsatisfactory method of doing business, as it opens a way for unjust competition, by enabling one maker to furnish a boiler wholly inadequate for the purpose desired, for a much less sum than another could afford, who was anxious to do what was right and proper for the occasion. If in requiring estimates, dimensions and specifications were given, there could be but little difference in prices, as each maker would be obliged to furnish exactly what was stipulated for, and the purchaser could select the design presenting the most advantages.

Digitized by Google

Digitized by Google

INDEX.

Air-pump..... 75, 76, 96, 98, 100
Air-pump and Condenser, Connection 100
Air-pump Cross-head..... 117
Air-pump of the Steam Yacht Ideal..... 127
Air-pumps..... 60, 86, 92
Algiers, Engines of S. S..... 98, 99
Allaire, James P., Compound Engines of 19
American Steamship Line, Engines of..... 101–103
Arbutus, U. S. S., Dimensions of..... 56
Arbutus, U. S. Steamer, Engines and Boilers of..... 56–72
Ashes, hoisting..... 71
Ash-pans 67, 123
Ash-shute.. 69
Bache, United States Coast Survey Steamer, experiments with Steam Machinery of..... 28–42
Bache, United States Coast Survey Steamer, description of the Engines of..... 28
Baird and Huston, Engines of..... 56
Bearings..... 96, 107
Bearings of Journal..... 104
Bed-plate..... 85, 93, 96, 102, 104, 115
Bed-plate or Frame..... 59
Bells, Speaking-tube, and Whistle 121
Bilge-pump..... 62, 75, 98, 102
Bilge-pumps 86, 96, 119
Bilge-valve and Pipe..... 66
Blake's Horizontal Steam Pump..... 76
Boat, Yacht, or Launch Engine..... 133
Boiler 66, 67, 122
Boiler attachments 68, 123
Boiler, Fastenings and Supports of..... 123
Boiler, Herreshoff, Patent Safety Coil..... 130
Boiler, Horizontal Fire-tube 136
Boiler, Horizontal Return Fire-tube..... 137, 138
Boiler, how to design a Marine..... 47–52
Boiler-plates, uniting..... 135
Boiler Power, to calculate..... 51
Boiler, relation of Water in, to Evaporation..... 137
Boiler, Return Tubular..... 136
Boiler Shells, to find the Thickness of Plates for..... 51
Boiler Stays, to find the area of..... 52
Boiler Tubes..... 138
Boilers 87, 97, 98, 99, 100
Boilers, Contracting for..... 139
Boilers, Crown Sheets of..... 136
Boilers, Cylindrical..... 93
Boilers, Deficiency of Water..... 136, 137
Boilers, Evaporating Power of..... 136
Boilers, Fire-tube 138
Boilers for Marine Use by H. L. Stellwagen..... 135–139
Boilers for United States Sloops of War..... 106
Boilers, High Pressure..... 135
Boilers, Multitubular..... 106
Boilers, necessity of Specifications in making Contracts for. 139
Boilers of the U. S. Iron Clad Miantonomoh, dimensions of..... 80–83
Boilers of the U. S. Iron Clad Miantonomoh, general description of..... 76–79
Boilers of United States Sloops of War..... 110
Boilers, Seams of..... 135
Boilers, the strongest. 135
Boilers, Water Space in..... 137
Boilers, Water Tube..... 138
Boxes..... 120
Box Girder Bed-plate..... 104
Bureau of Steam Engineering U. S. N..... 106
Carbon, Affinity of Oxygen for..... 9
Carboniferous Age, the..... 9
Carnot's Law of the Efficiency of any hot air, steam, or gas Engine..... 23
Cast-iron Flooring 69, 124
Centrifugal Circulating Pumps..... 86
Centrifugal Pump..... 98
Circulating Pumps..... 61, 93, 96
Circulating Water..... 98
City of New York, Engines of Steamship. 90–95
City of New York, Run from New York to San Francisco..... 94
City of Peking and City of Tokio, Trial Trips of..... 87
City of Peking, Engines and Boilers of the Steamer.... 84, 89
City of San Francisco, Engines of Steamship... 90–95
City of San Francisco, Indicator Diagrams of the S. S... 95
City of San Francisco, Run from New York to San Francisco..... 94
City of Sydney, Engines of Steamship..... 90–95
City of Tokio, Engines and Boilers of the Steamer.... 84–89
City of Tokio, Indicator Diagrams of..... 89
Coal Beds, the..... 9

Digitized by Google

Coal burned in the Steam Boiler, Proportion utilized..... 12
Combustion..... 9
Comparative Dimensions and Power of the S. S. New Orleans, Knickerbocker, and Hudson..... 112, 113
Compound and Non-compound Engines, Steam Jackets, etc., Comparative Experiments with..... 28–42
Compound and Non-compound Engines, Steam Jackets, etc., Table of result of experiments with..... 39
Compound and Surface Condensing Engines..... 101
Compound Condensing Engine, Herreshoff..... 131
Compound Engine, Difficulties which present themselves in regard to the Pressure between the two Pistons..... 22
Compound Engine, Fewer Difficulties working with..... 38
Compound Engine, History of..... 17–19
Compound Engine Invented by Hornblower..... 17
Compound Engine of Sims..... 18
Compound Engine of the United States Lighthouse Steamer Manzanita..... 104, 105
Compound Engine of W. McNaught..... 19
Compound Engine, Pressure in the Reservoir..... 23
Compound Engine, Saving by Use of..... 30–32
Compound Engine, the Cylinders of..... 21
Compound Engine, Theory of, practically and thoroughly explained..... 20–27
Compound Engine, What it is..... 21
Compound Engines and Boilers of Pacific Mail Steamship Company's Steamers City of Peking and City of Tokio 84–89
Compound Engines and Boilers of the U. S. Iron Clad, Miantonomoh..... 74–83
Compound Engines and Boilers of the Wm. Cramp & Sons Ship and Engine Building Company..... 100
Compound Engines, Boilers, and Screw Propellers for U. S. Sloops of War..... 106–110
Compound Engines of Erastus W. Smith..... 19
Compound Engines of Jas. P. Allaire..... 19
Compound Engines of Wolff..... 18
Compound Engines, To calculate the average pressure between the two pistons..... 22
Compound Engines, Various Types of..... 19
Compound Surface Condensing Engines, Double..... 96
Coil Boiler, Herreshoff..... 130
Condensation and Re-evaporation..... 10
Condensation, Water of, Trapping..... 128
Condenser of the Steam Yacht "Ideal"..... 127
Condenser, Surface..... 92, 104, 107
Condenser Tubes..... 75
Condensers..... 85, 92, 96, 98, 100, 116
Connecting-rod..... 62, 109, 117
Connecting-rods..... 75, 87, 96, 102
Copeland, Chas. W., Designs of..... 56–72
Copeland, Chas. W., Patent Engines of..... 56–72
Copeland, Chas. W., Specifications of..... 114
Corwin, U. S. S., High Pressure Condensing Engine of.. 73
Counterbalance Wheel..... 64
Cowper's Hot Pot..... 23
Cramp & Sons Compound Engines and Boilers..... 100
Cramp & Sons Ship and Engine Building Company's Engines of the American Steamship Line..... 101–103
Crank-pin..... 98, 104, 117
Crank-pins..... 109
Crank Shaft and Counterbalance Fly Wheel..... 92
Crank Shafts..... 63, 75, 83, 93, 97, 102
Cranks..... 97, 104, 109, 117
Cromwell Line of Steamers..... 111
Cross-head..... 62, 109
Cross-head Journals..... 96, 98, 102, 104
Cross-heads..... 101, 117
Cut-off, Sickle's Variable..... 98
Cut-off, the..... 108
Cut-off, the most economical point for the Pressure employed..... 40–42
Cut-off Valves..... 58, 75, 85, 91, 129
Cylinder, Economy of, as influenced by the Size of.... 34–36
Cylinder-heads..... 59
Cylinder-heads as Jackets..... 128
Cylinder, Steam..... 92
Cylinders....57, 74, 75, 76, 84, 90, 92, 98, 101, 104, 115, 128
Cylinders, High and Low Pressure..... 96, 101, 106, 107
Cylinders of a Compound Engine of 500 H. P., Calculations to determine the Capacity of..... 24–26
Cylinders of the Compound Engine..... 20–26
Cylinders, Reversing..... 75
Dallas, the United States Revenue Steamer, Experiments with the Steam Machinery of..... 28–42
Deadwood, Lining of..... 65
Decatur H. Miller, Engines of the S. S..... 96
Decatur H. Miller, Performances of the..... 97
Deck-scuttles..... 69, 124
Design a Marine Engine, to..... 43–46
Design a Screw Propeller, to..... 53–55
Dexter, the United States Revenue Steamer, Experiments with the Steam Machinery of..... 28–42
Dimensions of the Engines and Boilers of the U. S. Iron Clad Miantonomoh..... 76–83
Dimensions of the Steamships Holly and Jessamine..... 114
Distilling Apparatus..... 121
Double-bar Link Motion..... 101
Double Compound Surface Condensing Engines..... 96
Drip-pans..... 120
Duplicate Pieces..... 71
Eccentric and Rod..... 62
Eccentric on Shaft..... 98
Economical Point of Cut-off, the most, for the Pressure employed..... 40–42

Digitized by Google

Economy of Fuel in the Engines of the Morgan Steamships 99
Economy of Steam as influenced by the Size of the Cylinder 34–36
Economy of Steam as influenced by the Steam Pressures employed 36–40
Elder, John, Perfection of Compound Engine by 19
Emery, Chas. E., Design of 73
Emery, Chas. E., Experiments of, with Compound and Non-compound Engines 28–42
Engineers, American 110
Engine, Compound, of United States Lighthouse Steamer Manzanita 104, 105
Engine, Compound, Theory of 20–27
Engine, High-pressure, of the U. S. Steamer Corwin 73
Engine of the Steamship Hudson 111, 112
Engine of the Steam Yacht Ideal 127
Engine of the Steam Yacht Ideal, Peculiarities of 127
Engine, Yacht, of F. C. & A. E. Rowland 132
Engine, Yacht, of the New York Safety Steam Power Company 133, 134
Engines and Boilers of the Pacific Mail Steamship Co.'s Steamers City of Peking, and City of Tokio 84–89
Engines and Boilers of the U. S. Iron Clud Miantonomoh 74–83
Engines and Boilers of the U. S. Steamers Arbutus, Laurel, Pansy, and Fish Hawk 56–72
Engines and Boilers of the Wm. Cramp & Sons Ship and Engine Building Co 100
Engines, Boilers, and Screw Propellers for United States Sloops of War 106–110
Engines, Compound and Surface-condensing 101
Engines for United States Sloops of War, dimensions of parts 107
Engines of the American Steamship Line 101–103
Engines of the Iron Side Wheel Steamers Holly and Jessamine 114–126
Engines of the Morgan Steamships Lone Star, New York, Algiers, and Morgan City 98, 99
Engines of the Pacific Mail Steamships City of San Francisco, City of New York, and City of Sydney 90–95
Engines of the Return Connecting Rod Type 106
Engines of the Steamship Decatur H. Miller 96
Engines of the Steamships Holly and Jessamine, Description of 114
Engines of the U. S. Iron Clad Miantonomoh, Dimensions of 76–79
Engines of the U. S. Iron Clad Miantonomoh, General Description of 74
Engines, Pumping 92
Engines, Single Low-pressure, Surface-condensing 98
Exhaust Connections 60
Expansion Eccentric 91
Expansion, Ratio of, in Cylinders of Compound Engine 25
Expansion, to find the total range of, in the Cylinder of the Compound Engine 24
Expansion-valves 91, 106, 108
Eye-bolts 121
Fastenings 121
Fastenings and Supports of Boilers 67, 123
Feed-pumps 61, 86, 96, 98, 119
Felting 68, 123
Felting and Staving 121
Fish Hawk, U. S. Steamship, Dimensions of 56
Fish Hawk, U. S. Steamship, Engines and Boilers of 56–72
Flooring, Cast-iron 124
Framing 57
Front-links 117
Fuel, Economy of 13, 14
Fuel, Economy of, in the Use of the Herreshoff Engine 131
Furnaces 94
Furnaces, Boiler 138
Gallows Frame 124
Gauges 71, 121
Gong, Bell, and Speaking Tube 71
Grate Bars 68, 123
Grates 138
Guides 100
Guide "Slipper Slide." 104
Harlan & Hollingsworth Co 96, 98
Hart's White Lining Metal 96
Heat Energy developed in the Furnace of the Steam Boiler 10
Heat, Mechanical Equivalent of, Generated in the Boiler 12
Heat, Unutilized 10
Heating Surface 12
Heating to Grate Surface, Ratio of 51
Henry, Buchanan, on the Workings of the Engine of the Steamship Hudson 112
Herreshoff's Engines, Important Characteristics and Advantages of 131
Herreshoff Manufacturing Co 130
Herreshoff Marine Engine and Boiler 130, 131
High-pressure Condensing Engine of the U. S. Steamer Corwin 73
High-pressure Crank Webs 109
High pressure Cylinders 84, 92
High-pressure, General prejudice against 38
High-pressure Steam Ports 91
High-pressure Valve 85, 91
High Steam, few Difficulties with Working with a Compound Engine 38
Hirsch Plan of Screw Propeller 87
History of the Compound Engine 17–19

Digitized by Google

Hoffman's Improved Marine Engine..... 128, 129
Hoffman's Improved Marine Engine, Character of..... 129
Hoisting Engine..... 66
Hoisting of Ashes..... 71
Holly and Jessamine, Dimensions of..... 114
Holly and Jessamine, Engines of the Iron Side Wheel Steamers..... 114–126
Hook Motion..... 98
Horizontal Steam Pump, Blake's..... 76
Hornblower, Inventor of the Compound Engine..... 17
Hornblower, Steam Used by, at the Atmospheric Pressure. 18
Hornblower's Compound Engine, Description of..... 17, 18
Hot-well..... 60
Hudson, Engine of the Steamship..... 111, 112
Hudson, New Orleans, and Knickerbocker, Comparative Dimensions and Power..... 112, 113
Hudson, S. S., Working of the Engines of..... 112
Ideal, Steam Yacht, Engine of..... 127
Illinois Steamship and her Engines..... 101
Improved Marine Engine, Hoffman's..... 128, 129
Improvements in the Steam Engine, Limit has not been reached..... 16
Inboard Stuffing Boxes..... 65
Indiana, Steamship, and Her Engines..... 101
Indicator..... 121
Indicator Diagrams of S. S. City of Tokio..... 88, 89
Indicator Diagrams of the S. S. City of San Francisco... 95
Indicator Diagrams of the Steamship Ohio..... 102
Injection Valves..... 120
Internal Condensation and Re-evaporation..... 10
Iron Clad Miantonomoh, Engines and Boilers of..... 74–83
Jacket..... 128
Jessamine and Holly, Dimensions of..... 114
Jessamine and Holly, Engines of the Iron Side-wheel Steamers..... 114–126
Journals..... 93, 96, 98, 102, 104, 105
Knickerbocker, New Orleans, and Hudson, Comparative Dimensions and Power..... 112, 113
Ladders..... 121
Launch, Yacht or Boat Engine..... 133
Laurel, U. S. S., Dimensions of..... 56
Laurel, U. S. S., Engines and Boilers of..... 56–72
Line Shaft..... 63, 97, 98
Line Shaft Bearings..... 93
Line Shaft Pillow Block..... 64
Lining Metal, Hart's..... 96
Lining of Deadwood..... 65
Links..... 100
Links, Front..... 117
Lone Star, Engines of S. S..... 98, 99
Loring, Chas. A., Experiments of, with Compound and Non-compound Engines..... 28–42
Low Pressure Cylinders..... 84
Low Pressure Piston of a Compound Engine, Resistance of the Uncondensed Steam to the movement of..... 26
Low Pressure, Surface Condensing Engines..... 98
Low Pressure Valves..... 85
Main and Cut-off Valves..... 91
Main Centre..... 118
Main Cross-head and Guide..... 109
Main Journals..... 96, 98, 105
Main Pillow Blocks..... 63
Main Steam Valves..... 128
Main, Thomas, Designs by..... 84, 90
Main Valves..... 96, 101, 108, 128
Main Valves for Low Pressure Cylinder..... 91
Malster and Reaney, Engines of..... 56, 114
Manzanita, S. S., Engines of..... 104, 105
Manzanita, S. S., Log of, from New York to Bahia, Brazil. 105
Manzanita, S. S., Performances of..... 105
Marine Boiler, Most Important Parts of..... 47
Marine Boiler, Proportions of a..... 49–51
Marine Boiler, Rules for Proportion of..... 51
Marine Boiler, to Design a..... 47–52
Marine Boilers, Comparative Heating and Grate Surface.. 136
Marine Boilers, Construction of..... 135
Marine Boilers, Tubes for..... 136
Marine Engine and Boiler, Herreshoff..... 130, 131
Marine Engine, Hoffman's Improved..... 128, 129
Marine Engine, How to Design a..... 43–46
Marine Engine, Proportions for a..... 45, 46
Mechanical Equivalent of Heat Generated in the Boiler.. 12
Metal a Conductor of Heat..... 10
McNaughting an Engine..... 19
McNaught, W., Compound Engine of..... 19
Miantonomoh, U. S. Iron Clad, Dimensions of..... 74
Miantonomoh, U. S. Iron Clad, Engines and Boilers of. 74–83
Morgan City, Engines of Steamship..... 98, 99
Morgan Iron Works..... 74
Multitublar Boilers..... 106
New Orleans, Knickerbocker, and Hudson, Comparative Dimensions and Power..... 112, 113
New York, Engines of Steamship..... 98, 99
New York Safety Steam Power Co. Yacht Engine, Simplicity and Admirable Character of Mechanism..... 133
New York Safety Steam Power Co., Yacht Engine of. 133, 134
Ohio, Steamship, and her Engines..... 101
Ohio, Steamship, Indicator Diagrams of..... 102
Ohio, Steamship, Performance of Engine..... 103
Oil and Tallow Tanks..... 125
Oil cups and Drip-pans..... 120
Oil-cups and Water-pipes..... 71
Oil, Waste and Tallow-tanks..... 70
Outboard-delivery..... 66

Digitized by Google

Outboard Delivery-pipe..... 61
Oxygen, Affinity of Carbon for..... 9
Painting..... 71, 125
Pansy, U. S. Steamer, Engines and Boilers of..... 56–72
Pansy, U. S. Steamer, Dimensions of..... 56
Pass over Valves..... 58, 91
Patent Rights, Use of, on the Machinery of U. S. Steamers. 125
Pennsylvania, Steamship, and her Engines..... 101
Philosophy of the Steam Engine..... 9–16
Philosophy of the Steam Engine, the Changes which it Traces..... 10
Pillow blocks..... 85, 93, 118
Pipes..... 120
Pipes and Boxes..... 70
Piston-rods..... 61, 87, 96, 98, 108, 116
Pistons..... 61, 91, 101, 108
Piston, to Calculate the Square Inches of..... 26
Plunger Feed-pump..... 93
Poppet-valves..... 98
Power, Minimum Cost of, using a Single Engine and a Compound Engine, with and without a Steam-jacket, on the U. S. Steamers Bache and Dexter..... 35, 36
Pressure between the Pistons in Compound Engine, Determines the Amount of Power..... 23
Pressure in the Reservoir of the Compound Engine..... 23
Pressure on the Piston of the Compound Engine, Gross Effective..... 26
Pressure, the most Economical Point for the Cut-off of the..... 40–42
Principles Comprehended in the Philosophy of the Steam Engine..... 10
Propellers..... 64, 93, 97, 98, 101
Pump, Steam..... 76
Pumping Engines..... 92
Pumps.....86, 93, 96, 97, 98, 102, 104, 107, 120
Pumps, Air and Circulating..... 75
Pusey & Jones Co..... 56
Pusey, & Jones Co., Engines of..... 111
Ramsay, H. A., & Co..... 104
Re-evaporation and Condensation..... 10
Relief-valves..... 58, 96, 102
Reservoir or Intermediate Receiver in the Cylinder of the Compound Engine..... 22
Reversing and Starting Gear..... 109
Reversing Cylinders..... 75
Reversing Engine..... 100, 133
Reversing of Engines..... 101
Reversing Gear..... 91
Reynolds, Geo. H., Design of Engine by..... 127
Reversing of Engines..... 101
Roach, John & Son, Engines of..... 84, 90
Rowland's Yacht Engine..... 132
Rush, the United States Revenue Steamer, Experiments with the Steam Machinery of..... 28–42
Rush, U. S. Revenue Steamer, Description of the Engines of..... 28, 29
Salinometer..... 71
Safety Coil Boiler..... 130
Science, Teachings of, in regard to the Steam Engine. 13, 14, 15
Screw Propeller, How to Design..... 53–55
Screw Propeller on the Hirsch Plan..... 87
Screw Propeller, the Proportions of..... 53–55
Screw Propellers..... 64, 93, 97, 98, 101
Screw Propellers for United States Sloops of War..... 109
Sea-valves..... 66, 120
Selden's Water Filterer..... 76
Shaft Bracket..... 64
Shaft, Eccentric on..... 98
Shafts and Water-wheels..... 118
Sickles' Variable Cut-off..... 98
Side-delivery Valve..... 120
Side-pipes and Steam-chests..... 115
Sims' Compound Engine..... 18
Slides..... 105
Slide-valves..... 58, 96, 100, 101
Slide-valve Stem..... 62
Slipper Slide Guides..... 100
Smith, Erastus W., Compound Engines of..... 19
Smoke Chimney..... 124
Smoke Chimney and Casing..... 68
Speaking-tube..... 71
Speaking-tube, Whistle, and Bells..... 121
Specification for U. S. Steamer, Intent and Meaning of... 126
Specifications for Boiler..... 139
Specifications for Engines and Machinery of United States Steamer..... 56–72
Starting and Stopping Engine, Arrangement for..... 100
Starting and Reversing Gear..... 107, 109
Starting Cylinder..... 109
Starting Engine..... 91
Starting Engine, Arrangement for..... 100
Staving and Felting..... 121
Steam Bearing..... 65
Steam Boiler, Efficiency of..... 12, 13
Steam Boiler Furnace, Combustion of Fuel of..... 11
Steam Boiler Furnace, How it should be Constructed.. 11, 12
Steam Boiler of the Future..... 16
Steamboat Boilers, Present Mode of Building..... 135
Steam-chests..... 58
Steam-chests and Side-pipes..... 115
Steam Chimney or Superheater..... 94
Steam Cylinders..... 92
Steam, Economy of, as influenced by the size of the Cylinder..... 34–36

Digitized by Google

Stean., Economy of, as influenced by the Steam Pressures employed 36–40
Steam, Efficient Working of 13
Steam Engine, Available Heat 11
Steam Engine, Direction in which Improvement is Progressing 14
Steam Engines, Direction in which Improvement must take place 10
Steam Engine, Limit of Improvements 10, 11
Steam Engine, Management of, in the Future, ... 16
Steam Engine, Most Important Problem in the Improvement of 14
Steam Engine of the Future 14, 15, 16
Steam Engine, Philosophy of 9–16
Steam Engine, Principles Comprehended in the Philosophy of 10
Steam Engine, Principles which Govern its Design and Construction 11
Steam Engine, Theory of 15
Steam Engine, the Philosophy of, the Changes which it Traces 10
Steam Engine, Value of Small or High Pressure Cylinder of 32, 33
Steam Engine, what it is 9
Steam, Exhausting 75
Steam Heaters 125
Steam Heaters or Radiators 70
Steam Jacket, Advantages of 30, 31
Steam Jackets 10, 75, 101, 106
Steam Jacket, How it Produces Economy 33, 34
Steam Jackets, Experiments with 28–42
Steam Jackets of the Steamers Bache and Rush, Description of 29
Steam Jackets, Relative value of, on the two cylinders of a Compound Engine 33
Steam-pipe Connections 60
Steam Pipes and Fittings 65
Steam Pressure and Expansion, Increase of, since the time of Watt 15
Steam Pressure, higher and greater expansion in the Steam Engine of the future 16
Steam Pumps 69, 76, 120
Steam Reversing Gear 91
Steam Room 138
Steam Tube 86
Steam Valves 128
Steam Whistle 70
Steam Yacht Ideal, Engine of 127
Stellwagen, H. L. Boilers for Marine Use 135–139
Superheater 94
Surface Condenser 59, 84, 104, 107
Surface Condensing Compound Engines 101
Surface Condensing Engine 111
Tallow Tank 125
Tanks 125
Tanks, Oil, Waste, and Tallow 70
Theory of the Compound Engine practicelly and thoroughly explained 20–27
Throttle Valve 119
Thrust Pillow Block 63
Thrust Shaft 93
Thurston, Prof. R. H., on the Philosophy of the Steam Engine 9–16
Tools 72
Tubes, Boiler 138
Turning Engine 97
United States Sloops of War, Engines, Boilers, and Screw Propellers for 106–110
Valve Chests 75, 106
Valve Facings 85
Valve Gear 85
Valve Seats 121
Valves 90, 96, 105, 108, 120, 128, 129
Valves and Seats 98
Valves, Expansion 106
Valves, High and Low Pressure 85
Variable Cut-off 96
Ventilators 69, 124
Waste Tank 125
Water from Circulating Pump 102
Water of Condensation, Trapping of 128
Water Tanks 70, 125
Water-wheels and Shafts 118
Watt's Invention of a Separate Condenser 34
Whistle, Steam 70
White Lining Metal, Hart's 96
Woolf's Compound Engine 18
Working Beams 117
Yacht Engine of F. C. & A. E. Rowland 132
Yacht Engine of the New York Safety Steam Power Company 133, 134
Yacht Engines 127, 130–134
Yacht Ideal, Engine and Hull of 127

Digitized by Google

AMERICAN MACHINIST.

PUBLISHED WEEKLY

BY

AMERICAN MACHINIST PUBLISHING CO.

PRICE $3.00 PER YEAR. SINGLE COPIES 6 CENTS.

HORACE B. MILLER, Prest. LYCURGUS B. MOORE, Treas.

JACKSON BAILEY, Vice-Prest. DAVIS STRONG, Secy.

96 Fulton Street, New York.

EMORY EDWARDS,

CONSULTING

MECHANICAL ENGINEER.

ADDRESS { 512 WASHINGTON STREET, WILMINGTON, DEL.
{ 2 McMECHEN ST., (NEAR PARK AVE.,) BALTIMORE, MD.

FURNISHES DESIGNS, PLANS, SPECIFICATIONS, AND ESTIMATES FOR ALL KINDS OF STEAM MACHINERY, AND SUPERINTENDS THE CONSTRUCTION, ERECTION, REPAIR, AND RUNNING OF THE SAME.

ENGINES INDICATED

AND FAULTS IN WORKING DETECTED. THE EFFICIENT AND ECONOMICAL REPAIR OF ENGINES, BOILERS, ETC., A SPECIALTY.

Digitized by Google

Digitized by Google

Digitized by Google

Digitized by Google

Digitized by Google

Filmed 1983

Digitized by Google

UNIVERSITY OF MICHIGAN
3 9015 03148 8706

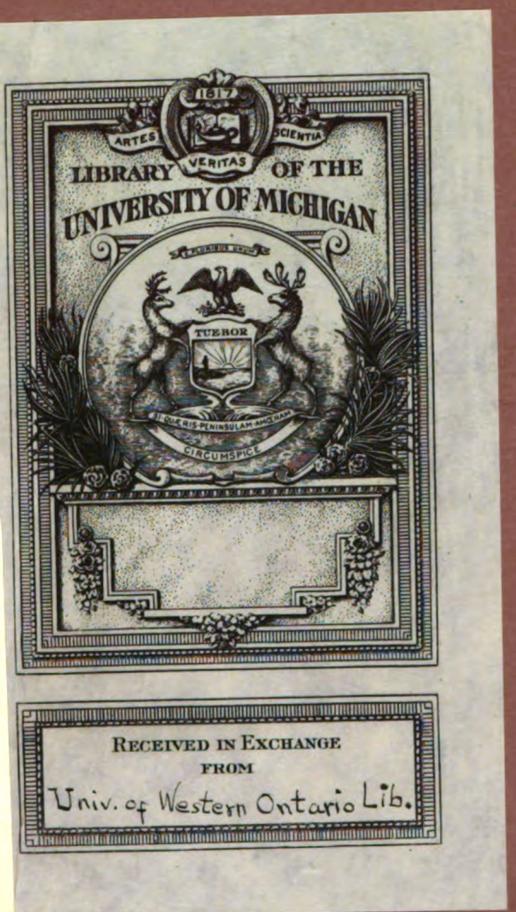

RECEIVED IN EXCHANGE
FROM
Univ. of Western Ontario Lib.

DO NOT REMOVE
OR
MUTILATE CARD

Digitized by Google